SERVICE MANUAL

ORION

DVD/VR-2951 / 2953

DVD VIDEO PLAYER & VHS VIDEO CASSETTE RECORDER

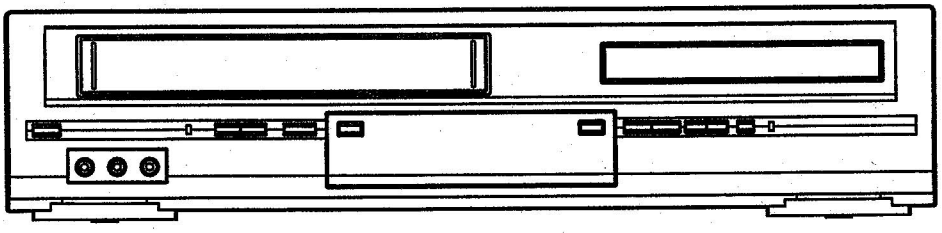

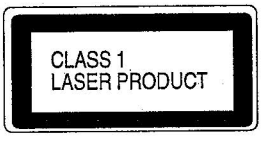

ORIGINAL
CHASSIS CODE A

Best. Nr. SM2951

IMPORTANT WARNING

CAUTION:
DVD PLAYER IS A CLASS 1 LASER PRODUCT. HOWEVER THIS PLAYER USES A VISIBLE LASER BEAM WHICH COULD CAUSE HAZARDOUS RADIATION EXPOSURE IF DIRECTED. BE SURE TO OPERATE THE PLAYER CORRECTLY AS INSTRUCTED.

THE FOLLOWING CAUTION LABEL IS LOCATED ON THE REAR PANEL OF THE PLAYER.

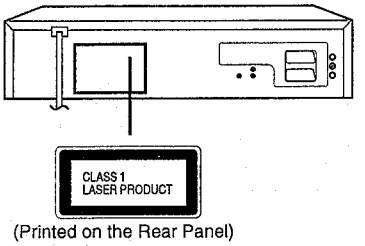

(Printed on the Rear Panel)

WHEN THIS PLAYER IS PLUGGED TO THE WALL OUTLET, DO NOT PLACE YOUR EYES CLOSE TO THE OPENING OF THE DISC TRAY AND OTHER OPENINGS TO LOOK INTO THE INSIDE OF THIS PLAYER.

USE OF CONTROLS OR ADJUSTMENTS OR PERFORMANCE OF PROCEDURES OTHER THAN THOSE SPECIFIED HEREIN MAY RESULT IN HAZARDOUS RADIATION EXPOSURE.

DO NOT OPEN COVERS AND DO NOT REPAIR YOURSELF. REFER SERVICING TO QUALIFIED PERSONNEL.

SERVICING NOTICES ON CHECKING

1. KEEP THE NOTICES

As for the places which need special attentions, they are indicated with the labels or seals on the cabinet, chassis and parts. Make sure to keep the indications and notices in the operation manual.

2. USE THE DESIGNATED PARTS

The parts in this equipment have the specific characters of incombustibility and withstand voltage for safety. Therefore, the part which is replaced should be used the part which has the same character.
Especially as to the important parts for safety which is indicated in the circuit diagram or the table of parts as a ⚠ mark, the designated parts must be used.

3. PUT PARTS AND WIRES IN THE ORIGINAL POSITION AFTER ASSEMBLING OR WIRING

There are parts which use the insulation material such as a tube or tape for safety, or which are assembled in the condition that these do not contact with the printed board. The inside wiring is designed not to get closer to the pyrogenic parts and high voltage parts. Therefore, put these parts in the original positions.

4. PERFORM A SAFETY CHECK AFTER SERVICING

Confirm that the screws, parts and wiring which were removed in order to service are put in the original positions, or whether there are the portions which are deteriorated around the serviced places serviced or not. Check the insulation between the antenna terminal or external metal and the AC cord plug blades. And be sure the safety of that.

HOW TO ORDER PARTS

Please include the following informations when you order parts. (Particularly the CHASSIS CODE.)
1. MODEL NUMBER and CHASSIS CODE
   The MODEL NUMBER can be found on the back of each product and the CHASSIS CODE can be found at the end of the SERIAL NUMBER.
2. PART NO. and DESCRIPTION
   You can find it in your SERVICE MANUAL.

TAPE REMOVAL METHOD AT NO POWER SUPPLY

1. Remove the Top Cabinet, Front Cabinet and DVD Block and the Fig. 1 below can be seen. **(Refer to item 1 of the DISASSEMBLY INSTRUCTIONS.)**
2. Remove one screw of the Loading Motor from the insert hole for screw driver and remove the Loading Motor.
3. Rotate the Pinch Roller Cam in the direction of the arrow by hand to slacken the Video Tape. **(Refer to Fig. 2)**
4. Rotate the Clutch Ass'y either of the directions to wind the Video Tape in the Cassette Case.
5. Repeat the above step 3~4. Then take out the Video Cassette from the Deck Chassis. Be careful not to scratch on the tape.

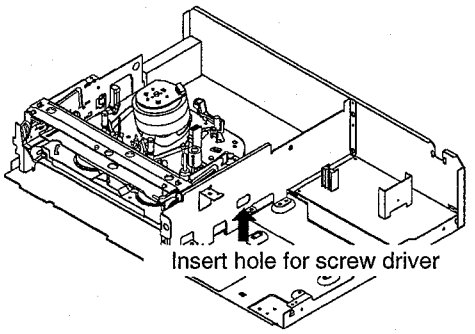

Fig. 1

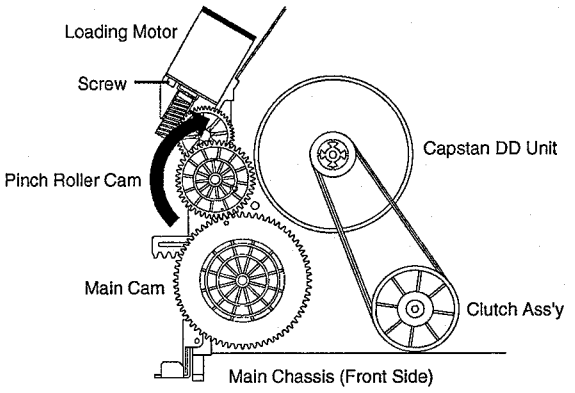

Fig. 2

DISC REMOVAL METHOD AT NO POWER SUPPLY

1. Remove the Top Cabinet and Front Cabinet. **(Refer to item 1 of the DISASSEMBLY INSTRUCTIONS.)**
2. Rotate the gear of Deck CD section in the direction of the arrow by hand, remove the disc from Deck CD. **(Refer to Fig. 3)**

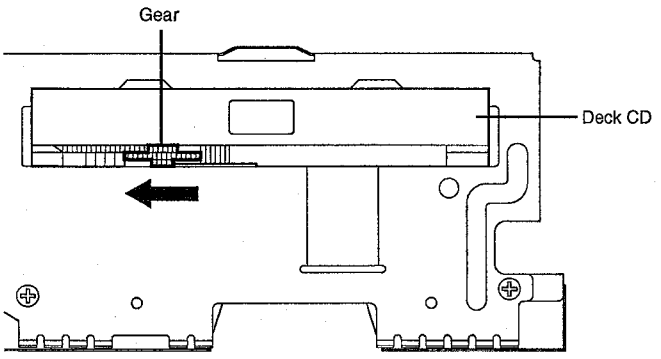

Fig. 3

PARENTAL CONTROL - RATING LEVEL

4-DIGIT SECURITY CODE CANCELLATION

If the stored 4-digit security code in the Rating Level menu needs to be cancelled, please follow the steps below.

1. Connect the set to TV Monitor.
2. Turn on the power, and set to the DVD stop mode.
3. Press the SET UP button to display the DVD menu.
4. Press the SET +/- button to select the "Operation" menu.
5. Press the CH UP/DOWN button to select the Parental Lock, then press the ENTER button.
6. Press the CH UP/DOWN button to select the ON or OFF, then press the ENTER button.
7. Press the STOP button four times on the remote control, then press the ENTER button. The 4-digit security code is cleared.
8. Press the SET UP button to disappear the DVD menu.

TABLE OF CONTENTS

IMPORTANT WARNING A1-1
SERVICING NOTICES ON CHECKING A1-1
HOW TO ORDER PARTS A1-1
TAPE REMOVAL METHOD AT NO POWER SUPPLY A1-2
DISC REMOVAL METHOD AT NO POWER SUPPLY A1-2
PARENTAL CONTROL-RATING LEVEL A1-2
TABLE OF CONTENTS A2-1
GENERAL SPECIFICATIONS ..... A3-1~A3-6
DISASSEMBLY INSTRUCTIONS
1. REMOVAL OF MECHANICAL PARTS AND P. C. BOARDS B1-1, B1-2
2. REMOVAL OF VCR PARTS ..... B2-1~B2-6
3. REMOVAL AND INSTALLATION OF FLAT PACKAGE IC B3-1, B3-2
KEY TO ABBREVIATIONS C1-1, C1-2
SERVICE MODE LIST C2-1
PREVENTIVE CHECKS AND SERVICE INTERVALS C3-1, C3-2
WHEN REPLACING EEPROM (MEMORY) IC C4-1
SERVICING FIXTURES AND TOOLS D1-1
PREPARATION FOR SERVICING D1-1
MECHANICAL ADJUSTMENTS ..... D2-1~D2-4
ELECTRICAL ADJUSTMENTS D3-1, D3-2
BLOCK DIAGRAMS
DVD E-1, E-2
Y/C/AUDIO/HEAD AMP E-3, E-4
SYTEM CONTROL/SERVO/TIMER E-5, E-6
REGULATOR E-7, E-8
OPERATION/DISPLAY E-9, E-10
TUNER/Hi-Fi/21PIN/OSD/G-STEREO/NICAM E-11, E-12
DVD IN/OUT E-13, E-14
POWER E-15, E-16
SUB MICON E-17, E-18
PRINTED CIRCUIT BOARDS
DVD F-1,F-2
VCR ..... F-3~F-6
POWER/OPERATION F-7, F-8
SCHEMATIC DIAGRAMS
READ CHANNEL G-1, G-2
DSP G-3, G-4
MPEG G-5, G-6
MEMORY G-7, G-8
AUDIO/VIDEO G-9, G-10
SYSCON1 ..... G-11, G-12
Y/C/AUDIO/HEAD AMP G-13, G-14
MICON G-15, G-16
TUNER/JACK G-17, G-18
REGULATOR G-19, G-20
DISPLAY G-21, G-22
Hi-Fi/DEMODULATOR G-23, G-34
DVD I/O G-25, G-26
SUB MICON/OSD G-27, G-29
POWER G-29, G-30
OPERATION G-31, G-32
INTERCONNECTION DIAGRAM G-34, G-35
WAVEFORMS ..... H-1~H-3
MECHANICAL EXPLODED VIEW I1-1
CHASSIS EXPLODED VIEWS I2-1, I2-2
MECHANICAL REPLACEMENT PARTS LIST J1-1
CHASSIS REPLACEMENT PARTS LIST J2-1
ELECTRICAL REPLACEMENT PARTS LIST ..... J3-1~J3-3

GENERAL SPECIFICATIONS

G-1	Outline of the product			DVD VIDEO PLAYER & VHS Player / Recorder
G-2	DVD System	Color System		PAL
		Disc		DVD, CD-DA, CD-R/RW, VIDEO CD
		Disc Diameter		120 mm , 80 mm
		Deck	Disc Loading System	Front Disc Loding
			Motor	3 Motors
		Pick up		1-Lens 2-Beams System
		Playback time (Max)	DVD 1-Layer	135min (4.7GB)
				245min (8.5GB)
			CD	74min
			VIDEO CD	74min
		Search speed	Actual	Fwd 2-100 times / 4 step (DVD) 4-8 times / 2 step (CD) 5-15 times / 2 step (VIDEO CD) 2-70 times (DVD) 4-12times (CD) 4-18times (VIDEO CD)
			Actual	Rev 2-100 times / 4 step (DVD) 4-8 times / 2 step (CD) 5-15 times / 2 step (VIDEO CD) 2-70 times (DVD) 4-12times (CD) 4-18times (VIDEO CD)
		Slow speed	Actual	Fwd 1/8-1/2 times (DVD, VIDEO CD) 1/7-1/2 times (DVD, VIDEO CD)
			Actual	Rev -- --
G-3	VCR System	System		VHS Player / Recorder
		Video System		PAL
		Hi-Fi STEREO		Yes
		NTSC PB(PAL60Hz)		Yes
		Deck	DECK	OVD-7
			Loading System	Front
			Motor	3
		Heads	Video Head	4Head
			FM Audio Head	2Head
			Audio /Control	MoNo/Yes
			Erase(Full Track Erase)	Yes
		Tape Speed	Rec PAL	SP/LP
			Rec NTSC	-
			Play PAL	SP/LP
			Play NTSC	SP
		Fast Forward / Rewind Time (Approx.)	at 25oC with Cassette	FF:1'12"/REW:1'12" E-180
		Forward/Reverse Picture Search	NTSC or PAL-M	SP=3x, 5x
			PAL or SECAM	SP/LP=5x, 7x / 7x, 13x
		Frame Advance		1/10
		Slow Speed		1/5, 1/10,1/30
G-4	Tuning System	Broadcasting System		CCIR System BG
		Tuner and Receive CH	System	1Tuner
			Destination	Oscar(W/HYPER)
			Tuning System	F-Synth
			Input Impedance	VHF/UHF 75 OHM
			CH Coverage	E2~E4, X~Z+2, S1~S10, E5~E12,S11~S41,E21~E69
		Intermediate Frequency	Picture(FP)	38.9 MHz
			Sound(FS)	33.4 MHz
			FP-FS	5.5 MHz
		Preset CH		80CH
		RF Converter Output		Yes
			Channel	36CH 23~69 CH
			Level/Impedance	73 dBu / 75 Ohm
			Sound Selector	No
		Stereo/Dual TV Sound		G.ST/NICAM DUAL
		Tuner Sound Muting		Yes
G-5	Power	Power Source	AC	230V 50Hz
			DC	-
		Power Consumption		22 W at 230V 50Hz
			Stand by	4 W at 230V 50Hz
			Per Year	-- W
		Protector	Power Fuse	Yes
G-6	Regulation		Safety	CE
			Radiation	CE
G-7	Temperature		Operation	5oC - 40oC
			Storage	-20oC - 60oC
G-8	Operating Humidity			Less then 80% RH

GENERAL SPECIFICATIONS

G-9	Signal	Video Signal		Output Level	1 V p-p/75 ohm (DVD,VCR)
				S/N Ratio (Weighted)	65 dB(DVD) 53 dB(VCR)
				Horizontal Resolution	500 Lines (DVD) 240 Lines(VCR at SP)
		RGB Signal		Output Level	0.7V p-p / 75 ohm
		Audio Signal		Input Level Microphone	-
				Input Level Line	-3.8 dBm/ 50k ohm(VCR)
			(0dB=0.775Vrms)	Output Level Line	-3.8 dBm/ 1k ohm(DVD,VCR)
				Digtal Output Level	0.5 V p-p / 75 ohm(DVD)
				S/N Ratio at (Weighted)	90dB(DVD) 42dB(VCR at SP)
				Harmonic Distortion (1KHz) Typical	0.1% (DVD) 1.5% (VCR at SP)
				Frequency Response : DVD Mode at DVD	4 Hz - 22 KHz
				DVD Mode at VIDEO CD	4 Hz - 20 KHz
				DVD Mode at CD	4 Hz - 20 KHz
				VCR Mode at SP	100Hz - 10 KHz
				VCR Mode at LP	100Hz - 5 KHz
				VCR Mode at SLP	-
		Hi-Fi Audio Signal		Dynamic Range : More than	75dB
				Frequency Response	20Hz ~20kHz
				Wow And Flutter : Less than	0.01 %Wrms
				Channel Separation : More than	60 dB
				Harmonic Distortion : Less than	0.01
G-10	**On Screen Display**	(DVD)	Menu		Yes
				Menu Type	Icon
			Picture		Yes
				TV Shape	Yes
				PAL/Auto	No
				Video Out Select	Yes
			Output Sound		Yes
				Audio Out Select	Yes
				Dynamic Range Control	Yes
				Karaoke Vocal	Yes
			Language		Yes
				On-Screen Language	Yes
				Disc Menu Language	Yes
				Audio Language	Yes
				Subtitle Language	Yes
			Display		Yes
				On-Screen Displays	Yes
				Background	Yes
				Screen Saver	Yes
			Operational		Yes
				Pause/Still	Yes
				Parental Lock	Yes
				Title Stop	Yes
				PBC	Yes
			Initial Setup		Yes
				On-Screen Displays	Yes
				TV Shape	Yes
				Audio Out Select	Yes
			Open		Yes
			Close		Yes
			No disc		Yes
			Reading		Yes
			Play		Yes
			Still/Pause		Yes
			Stop		Yes
			Prohibit Mark		Yes
			Step		Yes
			Skip+		Yes
			Skip-		Yes
			Random		Yes
			Repeat		Yes
			A-B Repeat		Yes
			Slow+ ##		Yes
			Slow- ##		No
			Search+ ##		Yes
			Search- ##		Yes
			Resume		Yes
			Title No.		Yes
			Chapter No.		Yes
			Track No.		Yes
			Time		Yes
			Sub Title No.		Yes
			Angle No.		Yes
			Audio No.		Yes
			Zoom		Yes
			Enter		Yes
			Exit		Yes
			Bit Rate		Yes
			Memory		Yes
			Screen Saver		Yes
			E.A.M		No

GENERAL SPECIFICATIONS

	On Screen Display(VCR)	Menu			Yes
			Menu	Type	Character
			ATS		No
			Timer Rec Set		Yes
			VCR Extension		Yes
				Auto Repeat On/Off	Yes
				Scene Repeat	Yes
				Audio Dubbing	Yes
			VCR Set-Up		Yes
				NICAM Auto/Off	Yes
				Audio Mix On/Off	Yes
				Color System	No
				Sharpness	Yes
				BBE On/Off	No
			CH Set-Up		Yes
				CH Tuning	Yes
				Auto Tuning	Yes
				CH Mapping	Yes
				Guide CH Set	No
			Pin Code Registration		No
			System Set-Up		Yes
				Clock Set	Yes (Calendar 24H)
				Language	Yes
				AV2 DEC/AV	Yes
		G-CODE(or SHOWVIEW or PLUSCODE)No. Entry			No
		NICAM 1/2,NICAM Off,Audio Output			Yes
		Stereo,Audio Output,Bilingual			Yes
		Play/Stop/FF/Rew/Rec/OTR/T-Rec/Pause/Eject/Tape In (Symbol Mark)			Yes
		Others		CH/AV	Yes
				Clock/Date	Yes
				Repeat	No
				Pin Code	No
				Tape Counter	Yes
				Index	Yes
				Hotel Lock	No
				Tape Speed	Yes
				Manual Tracking (Bar Setting)	Yes
				Hi-Fi	Yes
				S-Repeat/SR-R/SR-Play	Yes
				VPS	No
				PDC	No
				TEST Signal	Yes
G-11	OSD Language		DVD OSD		Eng Ger Fre
			VCR OSD		Eng Ger Fre
G-12	Clock,Timer and Timer Back-up	Calendar			1990/1/1 ~ 2081/12/31
		Timer Events			8 Program/ 1 Month
		One Touch Recording Max Time			SP:5Hours LP:10 Hours
		OTPB Valid Time			No
		Timer Back-up (at Power Off Mode)			30 Min
G-13	Display	DISPLAY			Yes
				DISPLAY type	LED Module (Green, "Rec" &Timer symbol = Red)
				Clock/Counter,CH,Timer Rec,OTR, Play Rec,FF(Cue),Rew(Rev),Stop,ATR,Eject	No
				VCR	Yes
				DVD	Yes
				CD	Yes
				Clock	Yes (24h)
				AM	No
				PM	No
				Counte VCR	Yes (hour:min)
				DVD	Yes (hour:min)
				CD	Yes (min:sec)
				Counter Remain	No
				Play	Yes
				Stop	No
				Rec	Yes
				FF / Cue	No
				REW /Review	No
				Pause/Still	Yes
				OTR	No
				T-Rec	Yes
				Chapter	No
				TITLE	No
				TRACK	Yes
				Repeat	No
				Hi-Fi	No
				SP	No
				LP	No
				SLP	No
				CH	Yes
				RF Output CH	Yes
				Eject	Yes
				Tape In	Yes

GENERAL SPECIFICATIONS

G-14	Remote Control	Unit		RC-FI
		Glow in Dark Remocon		No
		Power Source	Voltage(D.C)	3V
			UM size x pcs	UM-3 x 2 pcs
		Total Keys		50 Key
		Keys	Power	Yes
			DISPLAY/CALL	Yes
			EJECT	Yes
			OPEN/CLOSE	Yes
			1	Yes
			2	Yes
			3	Yes
			4	Yes
			5	Yes
			6	Yes
			7	Yes
			8	Yes
			9	Yes
			0/AV	Yes
			CH+	Yes
			CH-	Yes
			SHOWVIEW/PROGRAM	No
			PROGRAM	Yes
			TIMER REC	Yes
			REC/OTR	Yes
			SPEED	Yes
			MEMORY/ZERO RETURN	Yes
			CLOCK / COUNTER	Yes
			COUNTER RESET	Yes
			TV/VCR	Yes
			E.A.M.	No
			REC.END.SEARCH	No
			VCR	Yes
			DVD	Yes
			SET UP/MENU	Yes
			DVD MENU	Yes
			UP	Yes
			DOWN	Yes
			LEFT / TRACKING-	Yes
			RIGHT / TRACKING+	Yes
			ENTER / SELECT	Yes
			TITLE	Yes
			RETURN	Yes
			STOP	Yes
			PLAY	Yes
			PAUSE /STILL	Yes
			SKIP- / INDEX-	Yes
			SKIP+ / INDEX+	Yes
			REW(Review)/SEARCH-	Yes
			FF(Cue)/SEARCH+	Yes
			CANCEL	Yes
			REPEAT A-B	Yes
			ZOOM	Yes
			SLOW(Forward)	Yes
			ANGLE	Yes
			PLAY MODE	Yes
			SUBTITLE	Yes
			AUDIO	Yes

GENERAL SPECIFICATIONS

G-15	Features (DVD)	Auto Power Off		No
		Parental Lock	Yes	
		Video CD Playback	Yes	
		MP3 Playback	Yes	
		Digital Out	Dolby Digtal	Yes
			PCM	Yes
			DTS	Yes
			MPEG1,MPEG2	Yes
		Down Mix Out	(Dolby Digtal, MPEG1,MPEG2)	Yes
		Self Diagnostic		No
		Spatializer (N-2-2)		No
		Screen Saver	Yes	
		Frame Advance	Yes	
	Features (VCR)	Auto Head Cleaning	Yes	
		Auto Tracking	Yes	
		Index Search	Yes	
		HQ (VHS Standard High Quality)	Yes	
		Auto Power On, Auto Play, Auto Rewind, Auto Eject	Yes	
		Auto Repeat	Yes	
		Auto Power Off		No
		VIDEO PLUS+(SHOWVIEW,G-CODE)		No
		ATS		No
		PDC		No
		VPS		No
		Reverse Slow		No
		One Touch Playback		No
		Picture Control(Sharpness)	Yes	
		Channel Lock		No
		Hotel Lock		No
		Anti Theft		No
		Audio Dubbing	Yes	
		Remote Control Code 1/2		No
		BBE Audio		No
		Rec END Search		No
		SQPB		No
		CATV	Yes	
		CM Skip(30sec x 6 Times)		No
G-16	Accessories	Owner's Manual	Yes	
		Language	German	
		w/Guarantee Card	Yes	
		Remote Control Unit	Yes	
		Dew Cation Sheet		No
		Battery	Yes	
		UM size x pcs	UM-3 x 2 pcs	
		Tape Rewinder		No
		Safety Tip		No
		Toll Free Insert Sheet		No
		Quick Set-Up Sheet	Yes	
		Information Sheet	Yes	
		75 Ohm Coaxial Cable	Yes (0.9m)	
		type	Double shield	
		U/V Mixer		No
		DC Car Cord (Center+)		No
		Guarantee Card		No
		Warning Sheet		No
		Circuit Diagram		No
		Antenna Change Plug		No
		Service Facility List		No
		Important Safeguard		No
		Dew/AHC Caution Sheet		No
		AC Plug Adapter		No
		AC Cord		No
		AV Cord (2Pin-1Pin)		No
		Registration Card		No
		21pin Cable(Double Shield)	Yes	
		300 ohm to 75 ohm Antenna Adapter		No

GENERAL SPECIFICATIONS

G-17	Interface	Switch	Front	Power	Yes
				Play	Yes
				Eject (VCR)	Yes
				Stop	Yes
				Rec/OTR	Yes
				Open/Close (DVD)	Yes
				CH +	Yes
				CH -	Yes
				FF/ Search(>>)	Yes
				Rew/Search(<<)	Yes
				Still/Pause	No
				Shuttle(Search/REV/FWD)	No
				DVD/VCR	Yes
				Main Power SW	No
			Rear	Attenuator	No
				Video/RGB Selector	No
				RF Out(Slide SW)	No
				Main Power SW	No
		Volume		Phones Volume	No
				Mic Volume	No
				Echo Volume	No
				Rec/OTR	No
		Terminals	Front	Video In	RCA x1(Yellow)
				Audio In	RCA x 2(Stereo, White/Red)
			Rear	Video Output	No
				Audio Output	RCA x 2(Stereo, White/Red) Coaxial x 1 (Digital Audio,DVD Signal Only)
				Video Input	No
				Audio Intput	No
				Optical Digital Audio Out (Option)	No
				Euro Scart	2SCART
				Ext Speaker	No
				VHF/UHF Antenna Input/Output	DIN Type
				AC Inlet	No
		Indicator	LED	Power	No
				Rec	No
				T-Rec	No
				TV/VCR	No
				DVD	Yes (GREEN)
				VCR	Yes (GREEN)
				Surround	No
				Level Meter	No
G-18	Set Size			Approx. W x D x H (mm)	430 x 314.5 x 99
G-19	Weight			Net (Approx.)	4.5 kg(9.9lbs)
				Gross (Approx.)	5.5 kg(12.1lbs)
G-20	Carton		Master Carton		No
				Content	--- Sets
				Material	--- / ---
				Dimensions W x D x H(mm)	---
				Description of Origin	---
			Gift Box		Yes
				Material	Single/Full Color
				W/Color Phote Label	No
				Dimensions W x D x H(mm)	500 x 430 x 180
				Pulp Package	No
				Design	As Per BUYER 's
				Description of Origin	No
			Drop Test		Natural Dropping At 1 Corner / 3 Edges / 6 Surfaces
				Height (cm)	80 cm
			Container Stuffing		1,595 Sets/40' container
G-21	Cabinet Material			Cabinet Front	PS 94HB

DISASSEMBLY INSTRUCTIONS

1. REMOVAL OF MECHANICAL PARTS AND P.C. BOARDS

1-1: TOP CABINET AND FRONT CABINET (Refer to Fig. 1-1)

1. Remove the 5 screws ①.
2. Remove the Top Cabinet in the direction of arrow (A).
3. Disconnect the following connector: (CP681).
4. Unlock the 8 supports ②.
5. Remove the Front Cabinet in the direction of arrow (B).
6. Remove the 3 screws ③.
7. Remove the Operation PCB in the direction of arrow (C).

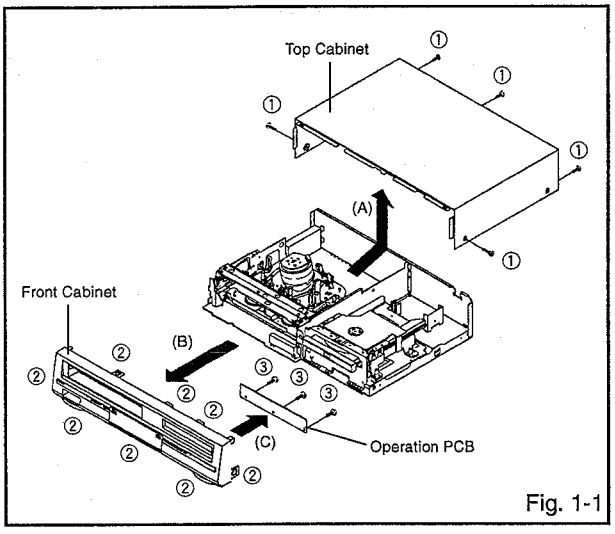

Fig. 1-1

1-2: FLAP (Refer to Fig. 1-2)

1. Open Flap to 90° and flex in direction of arrow (A), at the same time slide in direction of arrow (B).
2. Then lift in direction of arrow (C).

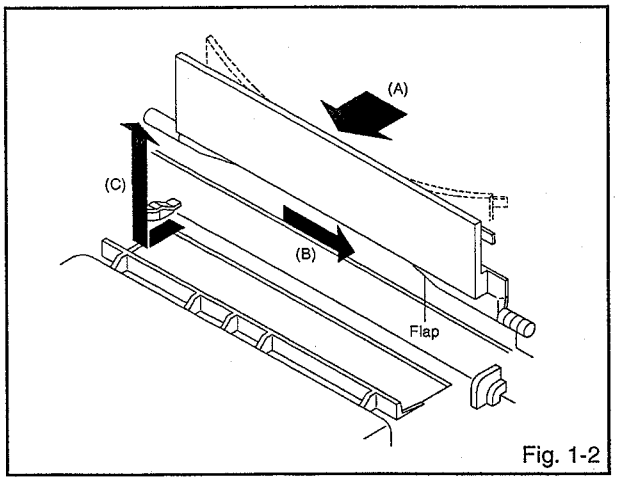

Fig. 1-2

1-3: DECK CD AND DVD PCB (Refer to Fig. 1-3)

1. Make the short circuit on the position as shown **Fig. 1-3** using a soldering. If you remove the Deck CD with no soldering, the Laser may be damaged.
2. Disconnect the following connector: (CP503).
3. Remove the 4 screws ①.
4. Remove the Deck Angle in the direction of arrow (A).
5. Remove the 2 screws ②.
6. Remove the Front-DVD Shield in the direction of arrow (B).
7. Remove the 4 screws ③.
8. Disconnect the following connectors: (CP2601, CP2602 and CP2603).
9. Remove the Deck CD in the direction of arrow (C).
10. Remove the 4 screws ④.
11. Remove the DVD PCB in the direction of arrow (D).

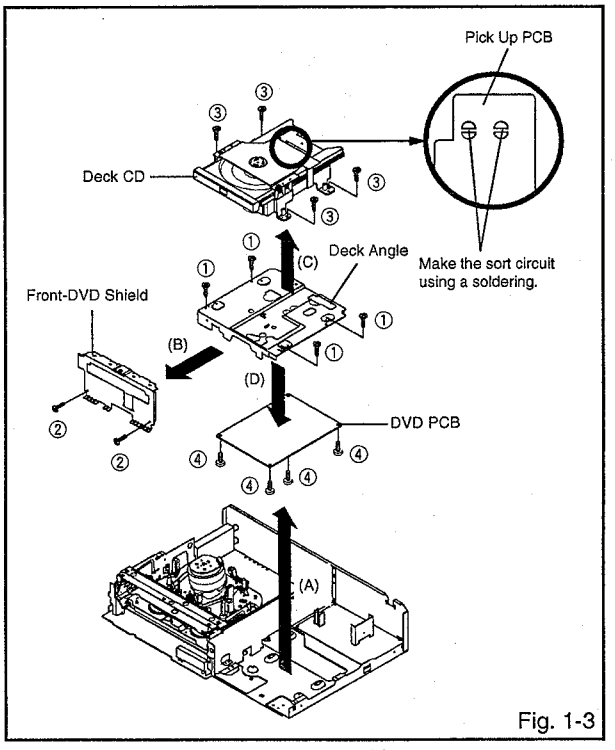

Fig. 1-3

NOTE

When the installation of the Deck CD, remove all the soldering on the short circuit position after the connection of Pick Up PCB and DVD PCB connector.

DISASSEMBLY INSTRUCTIONS

1-4: VCR DECK (Refer to Fig. 1-4)

1. Unlock the 2 supports ① and remove the Top Holder.
2. Remove the 3 screws ②.
3. Disconnect the following connectors: (CP101, CP102, CP103 and CP3001).
4. Remove the AC Head Cover and VCR Deck in the direction of arrow.

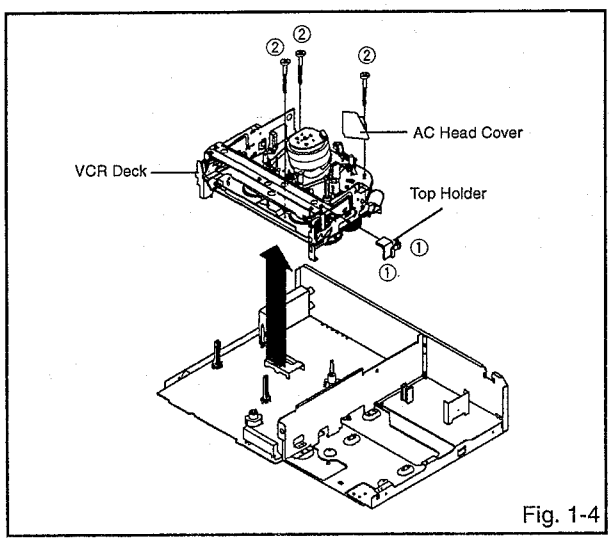

Fig. 1-4

1-5: VCR PCB (Refer to Fig. 1-5)

1. Remove the screw ① and Fiber Washer.
2. Remove the 4 screws ②.
3. Disconnect the following connectors: (CP1701, CP8001 and CP8002).
4. Remove the VCR PCB in the direction of arrow.

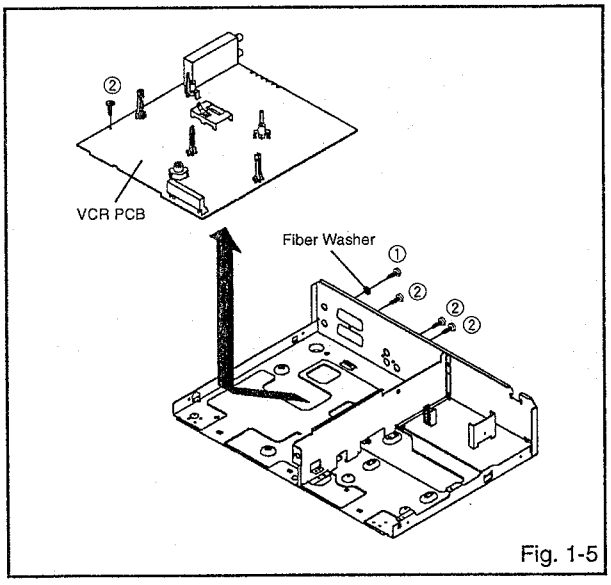

Fig. 1-5

1-6: POWER PCB (Refer to Fig. 1-6)

1. Remove the 3 screws ①.
2. Remove the Power PCB in the direction of arrow.

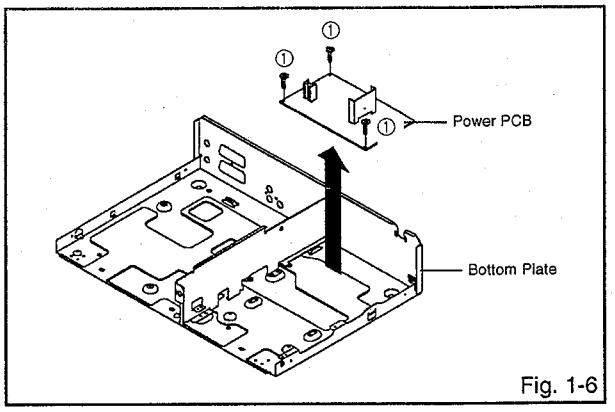

Fig. 1-6

DISASSEMBLY INSTRUCTIONS

2. REMOVAL OF VCR DECK PARTS

2-1: TOP BRACKET (Refer to Fig. 2-1)

1. Extend the 2 supports ①.
2. Slide the 2 supports ② and remove the Top Bracket.

NOTE

1. After the installation of the Top Bracket, bend the support ① so that the Top Bracket is fixed.

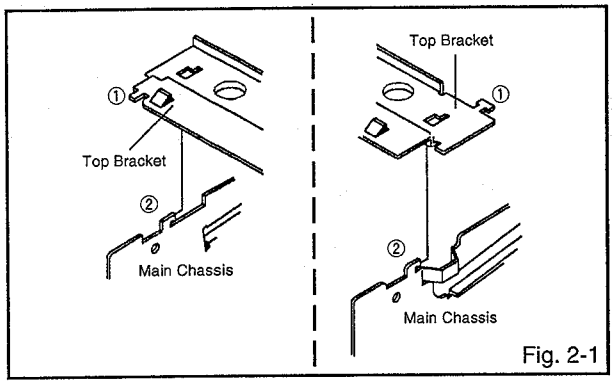

Fig. 2-1

2-2: CASSETTE HOLDER ASS'Y (Refer to Fig. 2-2)

1. Move the Cassette Holder Ass'y to the front side.
2. Push the Locker R to remove the Cassette Side R.
3. Remove the Cassette Side L.

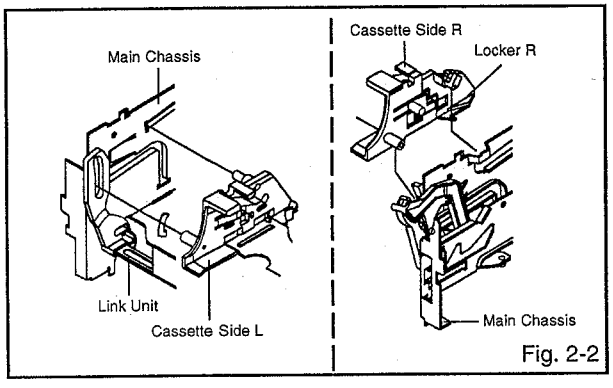

Fig. 2-2

2-3: CASSETTE SIDE L/R (Refer to Fig. 2-3-A)

1. Remove the Locker Spring.
2. Unlock the 4 supports ① and then remove the Cassette Side L/R.
3. Unlock the support ② and then remove the Locker R.

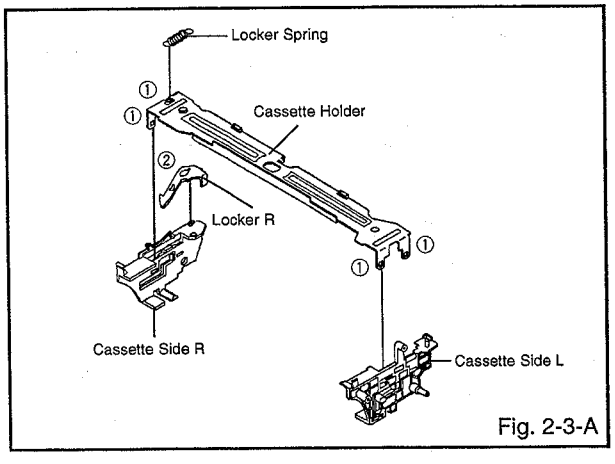

Fig. 2-3-A

NOTE

1. In case of the Locker R installation, check if the two positions of Fig.2-3-B are correctly locked.
2. When you install the Cassette Side R, be sure to move the Locker R after installing.

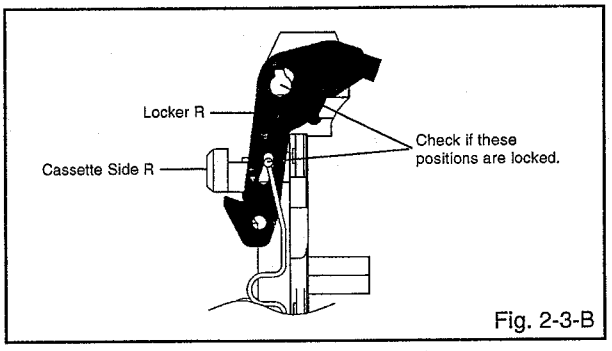

Fig. 2-3-B

2-4: LINK UNIT (Refer to Fig. 2-4)

1. Set the Link Unit to the Eject position.
2. Unlock the support ①.
3. Remove the (A) side of the Link Unit first, then remove the (B) side.

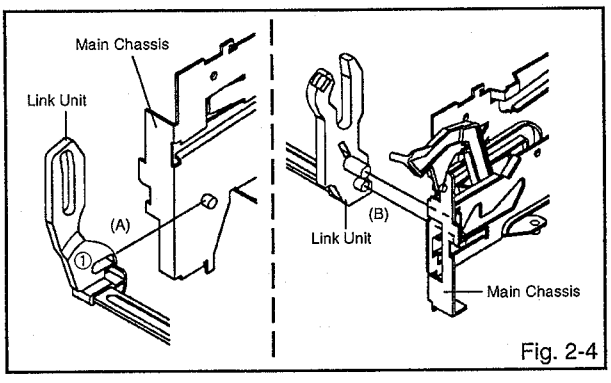

Fig. 2-4

2-5: LINK LEVER/FLAP LEVER (Refer to Fig. 2-5)

1. Extend the support ①.
2. Remove the Link Lever.
3. Remove the Flap Lever.

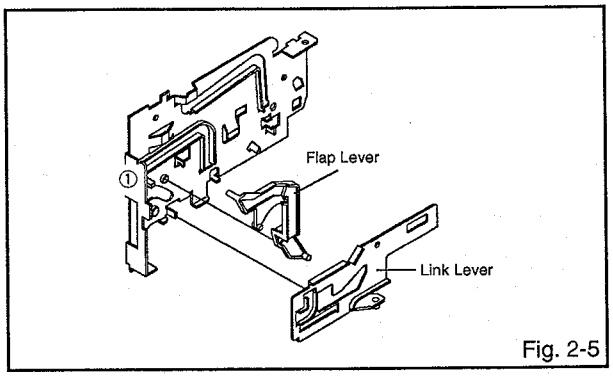

Fig. 2-5

DISASSEMBLY INSTRUCTIONS

2-6: LOADING MOTOR/WORM (Refer to Fig. 2-6-A)

1. Remove the screw ①.
2. Remove the Loading Motor.
3. Remove the Worm.

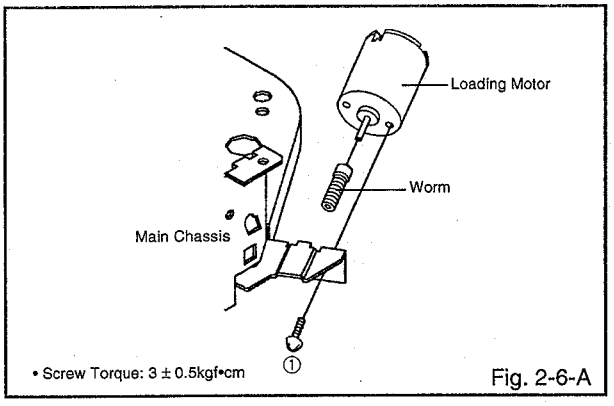

Fig. 2-6-A

NOTE

1. In case of the Worm installation, check if the value of the Fig. 2-6-B is correct.
2. In case of the Loading Motor installation, hook the wire on the Cassette Opener as shown Fig. 2-6-C.

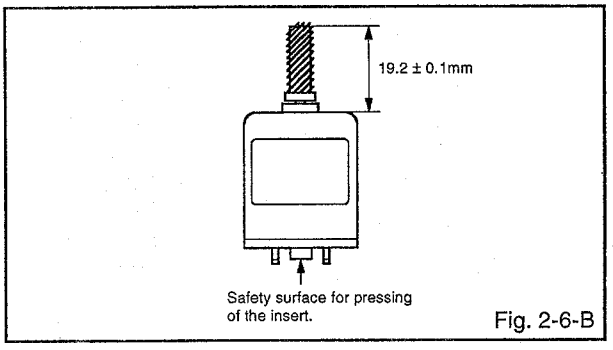

Fig. 2-6-B

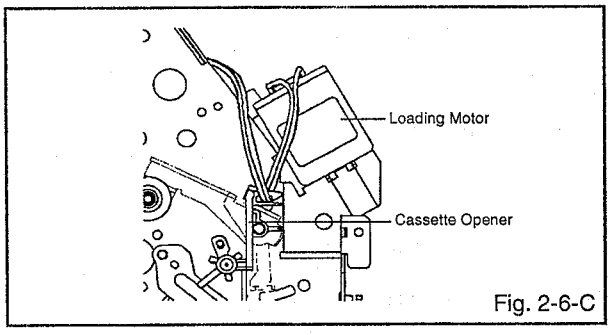

Fig. 2-6-C

2-7: TENSION ASS'Y (Refer to Fig. 2-7-B)

1. Turn the Pinch Roller Cam clockwise so that the Tension Holder hook is set to the position of Fig. 2-7-A to move the Tension Arm Ass'y.
2. Remove the Tension Spring.
3. Unlock the 2 supports ① and remove the Tension Band.
4. Unlock the support ② and remove the Tension Arm Ass'y.
5. Unlock the support ③ and remove the Tension Connect.
6. Float the hook ④ and turn it clockwise then remove the Tension Holder.

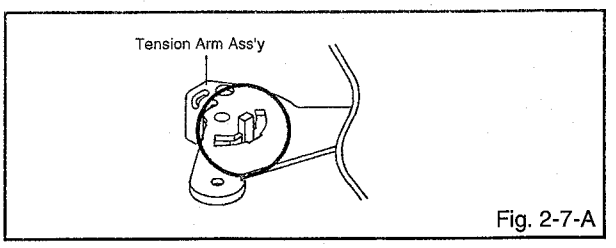

Fig. 2-7-A

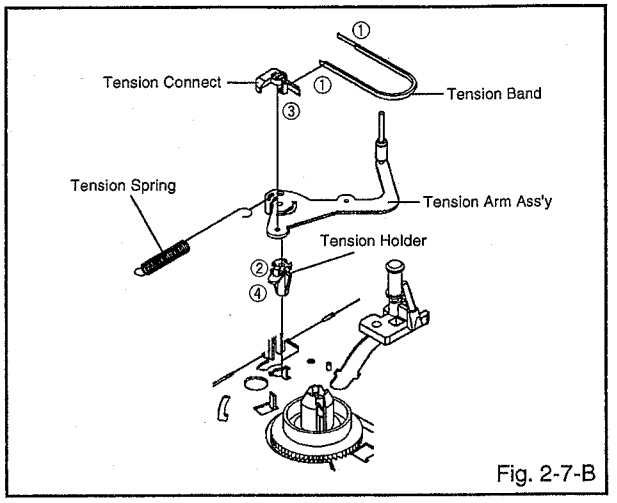

Fig. 2-7-B

NOTE

1. In case of the Tension Band installation, note the direction of the installation. **(Refer to Fig. 2-7-C)**
2. In case of the Tension Band installation, install correctly as Fig. 2-7-D.
3. In case of the Tension Connect installation, install as the circled section of Fig. 2-7-E.

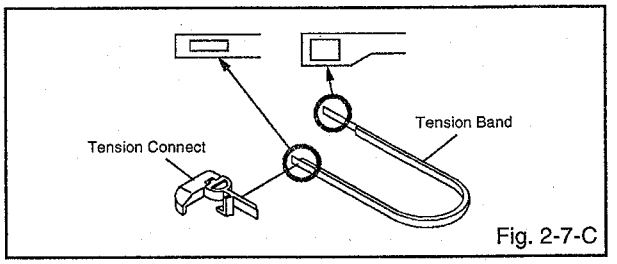

Fig. 2-7-C

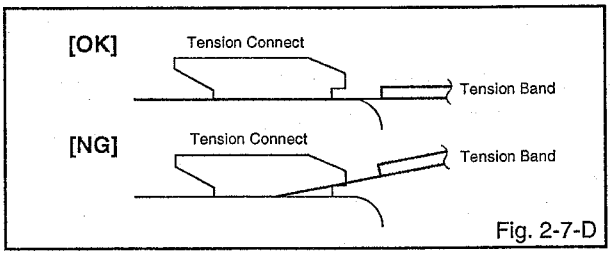

Fig. 2-7-D

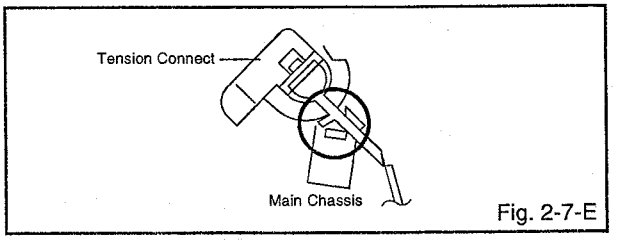

Fig. 2-7-E

DISASSEMBLY INSTRUCTIONS

2-8: T BRAKE ARM/T BRAKE BAND (Refer to Fig. 2-8-A)

1. Remove the T Brake Spring.
2. Turn the T Brake Arm clockwise and bend the hook section to remove it.
3. Unlock the 2 supports ① and remove the T Brake Band.

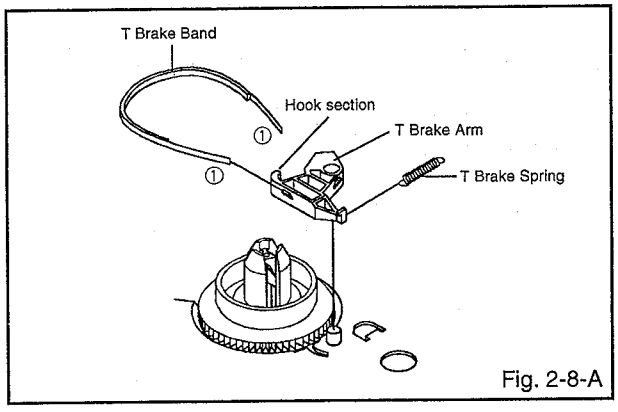

Fig. 2-8-A

NOTE

1. In case of the T Brake Band installation, install correctly as Fig. 2-8-B.

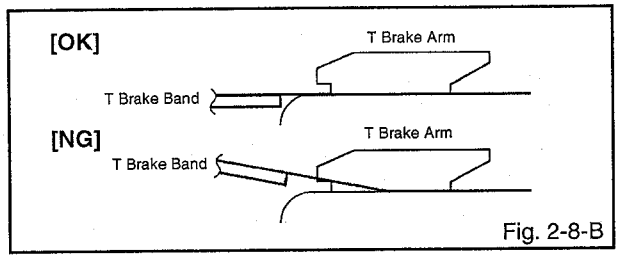

Fig. 2-8-B

2-9: S REEL/T REEL/IDLER ARM ASS'Y/IDLER GEAR (Refer to Fig. 2-9-A)

1. Remove the S Reel and T Reel.
2. Remove the 2 Polyslider Washers ①.
3. Remove the Idler Arm Ass'y and Idler Gear.

NOTE

1. Take care not to damage the gears of the S Reel and T Reel.
2. The Polyslider Washer may be remained on the back of the reel.
3. Take care not to damage the shaft.
4. Do not touch the section "A" of S Reel and T Reel. (Use gloves.) **(Refer to Fig. 2-9-A)** Do not adhere the stains on it.
5. When you install the reel, clean the shaft and grease it (FG-84M). (If you do not grease, noise may be heard in FF/REW mode.)
6. After installing the reel, adjust the height of the reel. **(Refer to MECHANICAL ADJUSTMENT)**

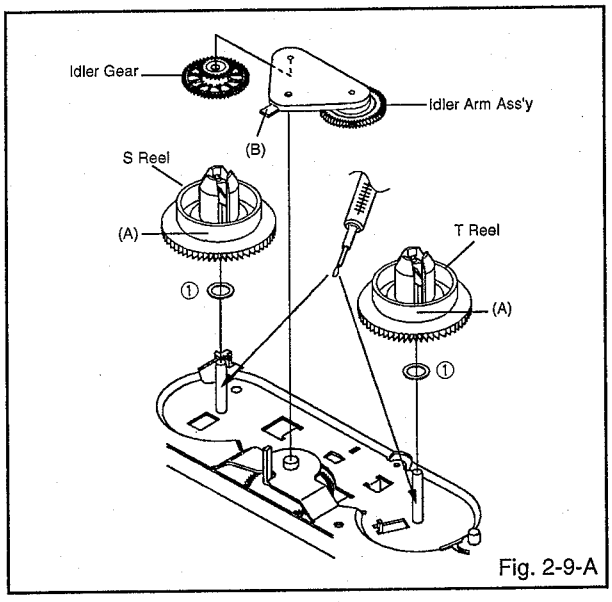

Fig. 2-9-A

NOTE

1. In case of the S Reel and T Reel installation, check if the correct parts are installed. **(Refer to Fig. 2-9-B)**
2. In case of the Idler Arm Ass'y installation, install correctly as Fig. 2-9-C. And also set it so that the section "B" of Fig. 2-9-A is placed under the Main Chassis tab.

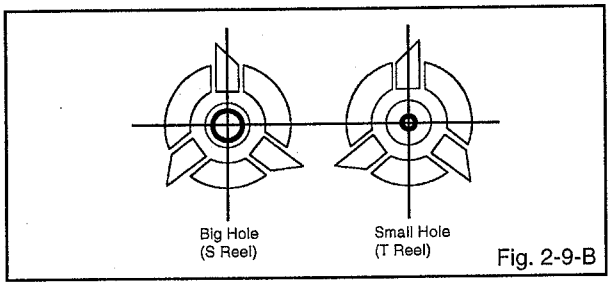

Fig. 2-9-B

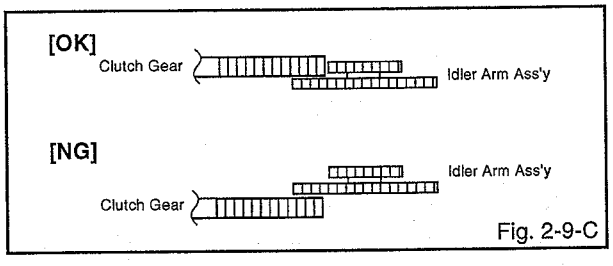

Fig. 2-9-C

DISASSEMBLY INSTRUCTIONS

2-10: CASSETTE OPENER/PINCH ROLLER BLOCK/ P5 ARM ASS'Y (Refer to Fig. 2-10-A)

1. Unlock the support ① and remove the Cassette Opener.
2. Remove the Pinch Roller Block and P5 Arm Ass'y.

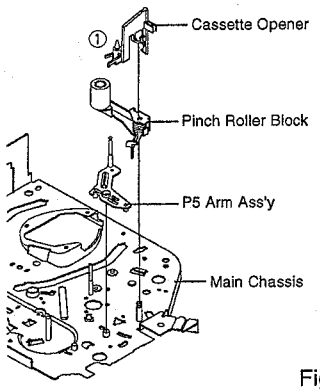

Fig. 2-10-A

NOTE

1. Do not touch the Pinch Roller. (Use gloves.)
2. In case of the Pinch Roller Block and the Pinch Roller Cam installation, install correctly as Fig. 2-10-B.

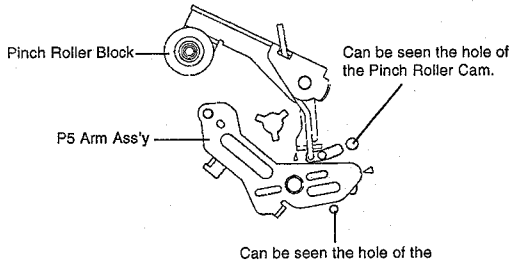

Fig. 2-10-B

2-11: A/C HEAD (Refer to Fig. 2-11-A)

1. Remove the screw ①.
2. Remove the A/C Head Base.
3. Remove the 3 screws ②.
4. Remove the A/C Head and A/C Head Spring.

NOTE

1. Do not touch the A/C Head. (Use gloves.)
2. When you install the A/C Head Spring, install as shown in Fig. 2-11-B.
3. When you install the A/C Head, tighten the screw (1) first, then tighten the screw (2), finally tighten the screw (3).

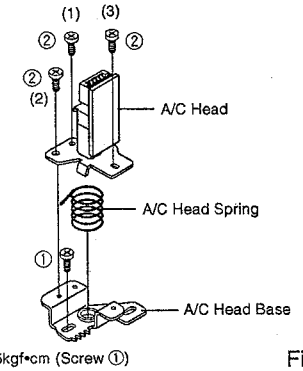

• Screw Torque: 5 ± 0.5kgf•cm (Screw ①)
Fig. 2-11-A

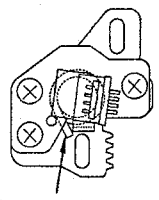

Fig. 2-11-B

2-12: FE HEAD (RECORDER ONLY) (Refer to Fig. 2-12)

1. Remove the screw ①.
2. Remove the FE Head.

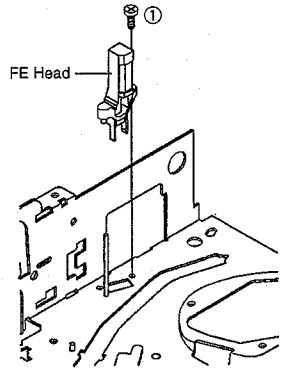

• Screw Torque: 5 ± 0.5kgf•cm
• The FE Head is not installed on the Video Cassette Player.
Fig. 2-12

2-13: AHC ASS'Y/CYLINDER UNIT ASS'Y (Refer to Fig. 2-13)

1. Unlock the support ① and remove the AHC Ass'y.
2. Disconnect the following connector: (CD2001)
3. Remove the 3 screws ②.
4. Remove the Cylinder Unit Ass'y.

NOTE

1. When you install the Cylinder Unit Ass'y, tighten the screws from (1) to (3) in order while pulling the Ass'y toward the left front direction.

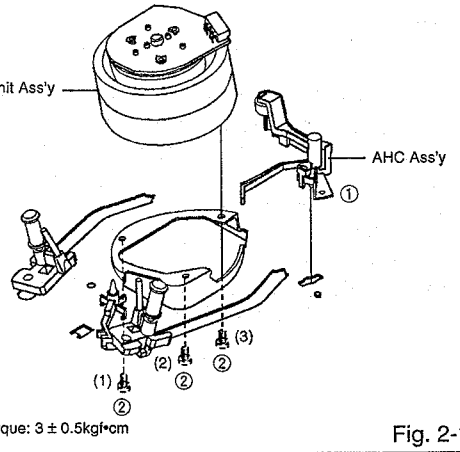

• Screw Torque: 3 ± 0.5kgf•cm
Fig. 2-13

DISASSEMBLY INSTRUCTIONS

2-14: CAPSTAN DD UNIT (Refer to Fig. 2-14-A)

1. Remove the Capstan Belt.
2. Remove the 3 screws ①.
3. Remove the Capstan DD Unit.

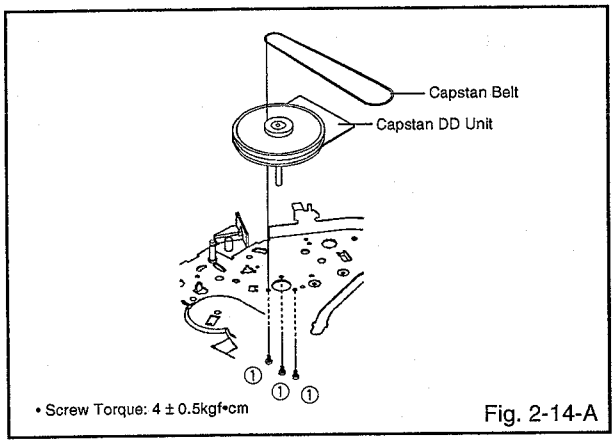

Fig. 2-14-A

NOTE

1. In case of the Capstan DD Unit installation, apply the silicon bond (TSE3843-W) on the position Fig. 2-14-B correctly. (If no silicon bond applied, abnormal noise will be heard on the deck operation.) **(Refer to Fig. 2-14-B, C)**

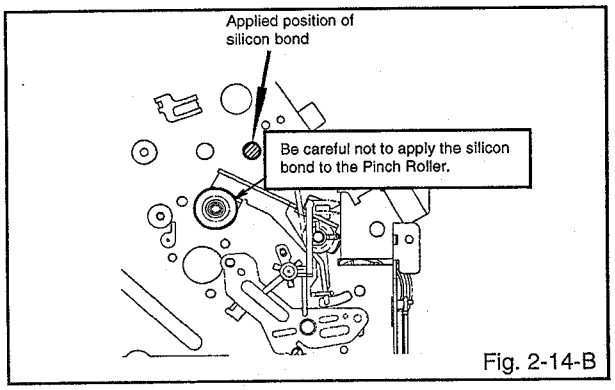

Fig. 2-14-B

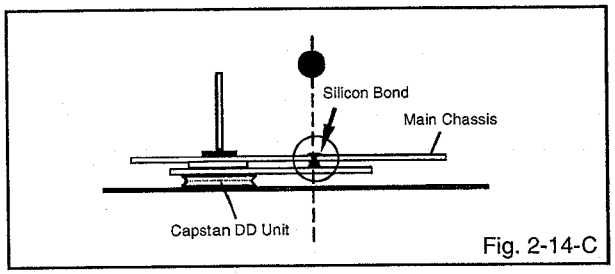

Fig. 2-14-C

2. When installing the wires between Capstan DD Unit and Loading Motor, connect them correctly as shown Fig. 2-14-D. **(Refer to Fig. 2-14-D)**

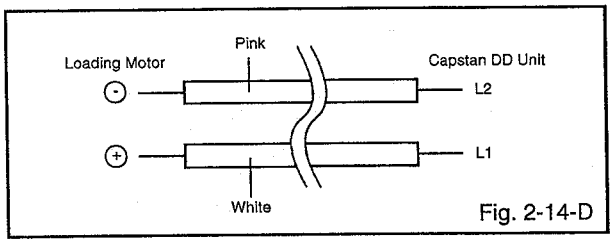

Fig. 2-14-D

2-15: MAIN CAM/PINCH ROLLER CAM/JOINT GEAR (Refer to Fig. 2-15-A)

1. Remove the E-Ring ①, then remove the Main Cam.
2. Remove the E-Ring ②, then remove the Pinch Roller Cam and Joint Gear.

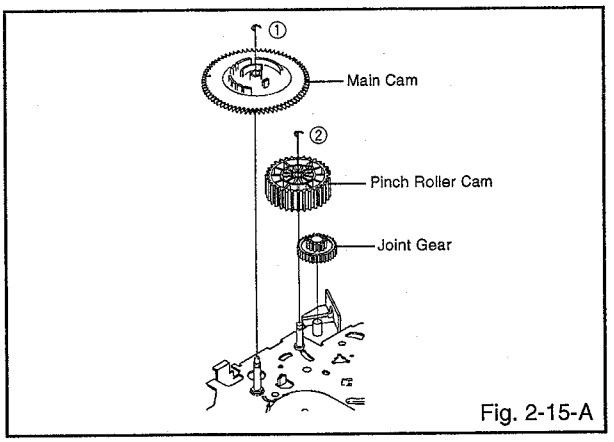

Fig. 2-15-A

NOTE

1. In case of the Pinch Roller Cam and Main Cam installation, install them as the circled section of Fig. 2-15-B so that the each markers are met. **(Refer to Fig. 2-15-B)**

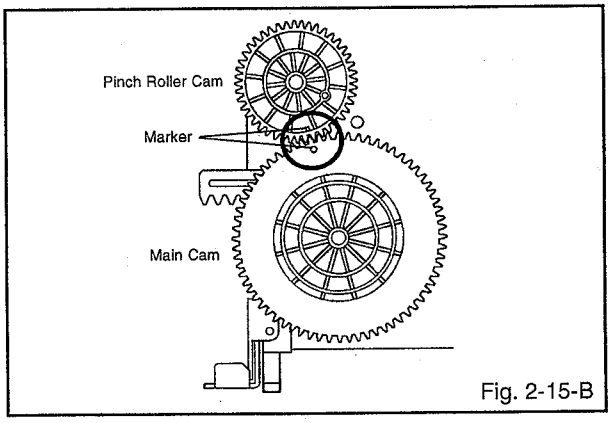

Fig. 2-15-B

2-16: LOADING GEAR S/T UNIT (Refer to Fig. 2-16-A)

1. Remove the E-Ring ① and remove the Main Loading Gear.
2. Remove the Main Rod, Tension Lever, Loading Arm S Unit and Loading Arm T Unit.

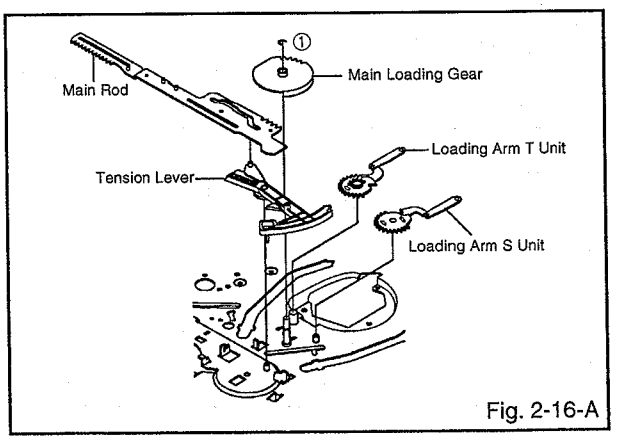

Fig. 2-16-A

DISASSEMBLY INSTRUCTIONS

NOTE

1. When you install the Loading Arm S Unit, Loading Arm T Unit and Main Loading Gear, align each marker. **(Refer to Fig. 2-16-B)**

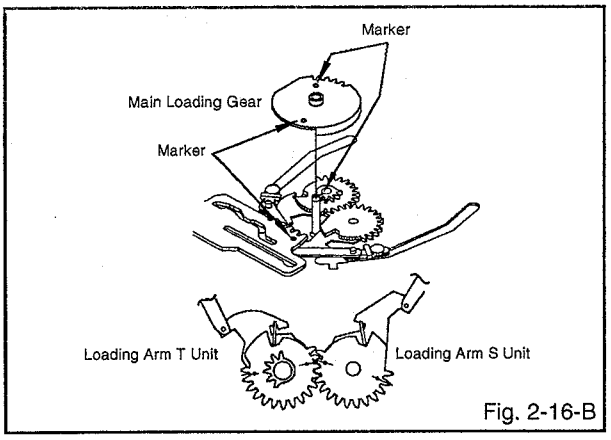

Fig. 2-16-B

2-17: CLUTCH ASS'Y/RING SPRING/CLUTCH LEVER/ CLUTCH GEAR (Refer to Fig. 2-17-A)

1. Remove the Polyslider Washer ①.
2. Remove the Clutch Ass'y and Ring Spring.
3. Remove the Clutch Lever.
4. Remove the Coupling Gear, Coupling Spring and Clutch Gear.

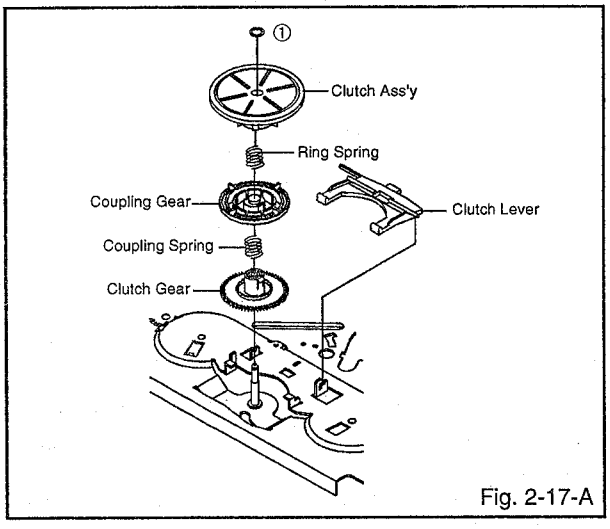

Fig. 2-17-A

NOTE

1. In case of the Clutch Ass'y installation, install it with inserting the spring of the Clutch Ass'y into the dent of the Coupling Gear. **(Refer to Fig. 2-17-B)**

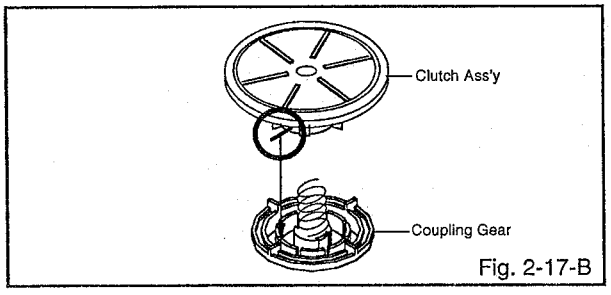

Fig. 2-17-B

2-18: CASSETTE GUIDE POST/INCLINED BASE S/T UNIT/P4 CAP (Refer to Fig. 2-18-A)

1. Remove the P4 Cap.
2. Unlock the support ① and remove the Cassette Guide Post.
3. Remove the Inclined Base S Unit and Inclined Base T Unit.

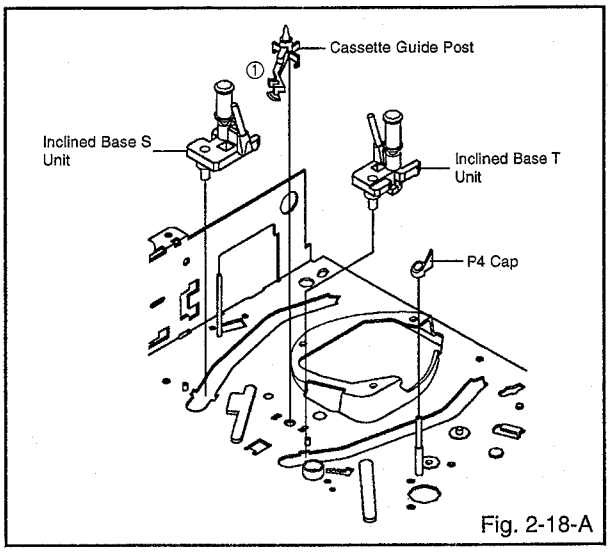

Fig. 2-18-A

NOTE

1. Do not touch the roller of Guide Roller.
2. In case of the P4 Cap installation, install it with parallel for "A" and "B" of Fig. 2-18-B.
3. In case of the Cassette Guide Post installation, install correctly as the circled section of Fig. 2-18-C.

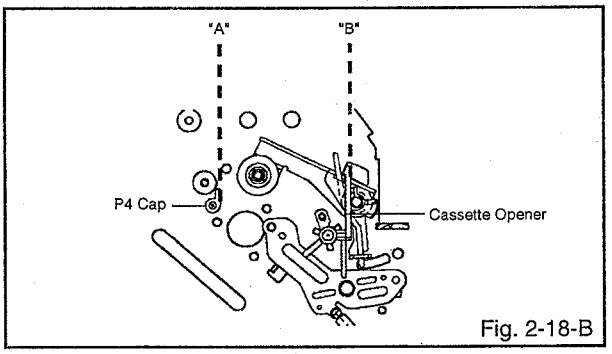

Fig. 2-18-B

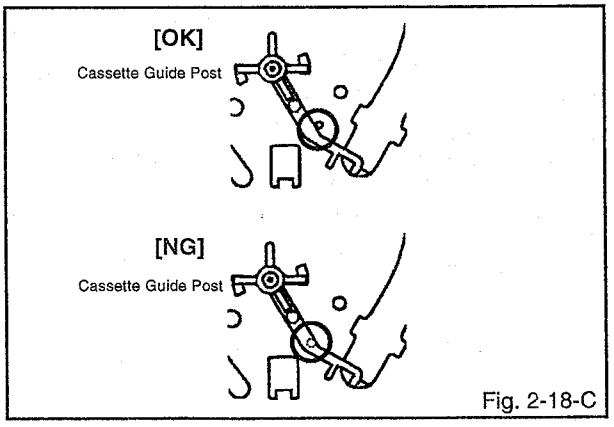

Fig. 2-18-C

DISASSEMBLY INSTRUCTIONS

3. REMOVAL AND INSTALLATION OF FLAT PACKAGE IC

REMOVAL

1. Put the Masking Tape (cotton tape) around the Flat Package IC to protect other parts from any damage. **(Refer to Fig. 3-1.)**

   NOTE

   Masking is carried out on all the parts located within 10 mm distance from IC leads.

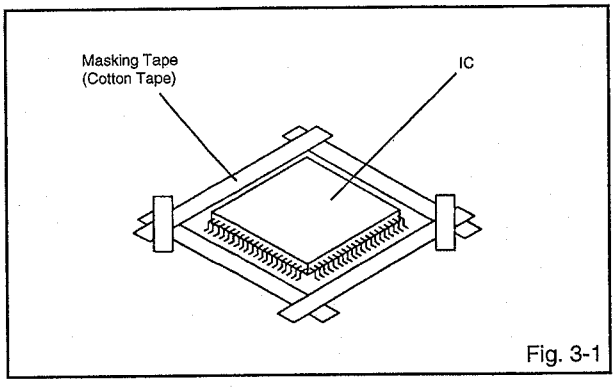

Fig. 3-1

2. Heat the IC leads using a blower type IC desoldering machine. **(Refer to Fig. 3-2.)**

   NOTE

   Do not add the rotating and the back and forth directions force on the IC, until IC can move back and forth easily after desoldering the IC leads completely.

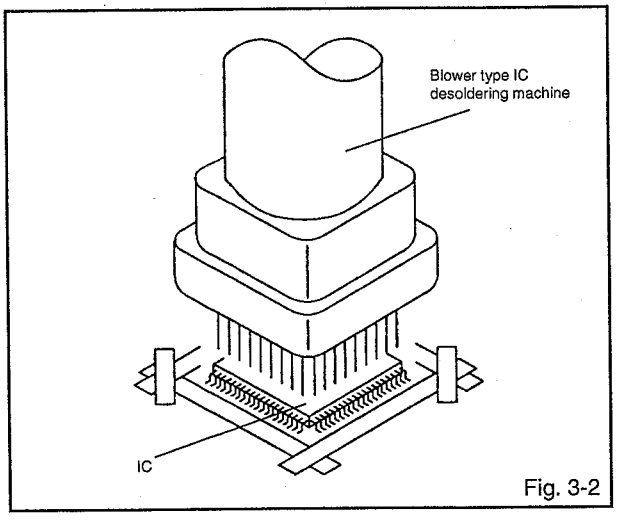

Fig. 3-2

3. When IC starts moving back and forth easily after desoldering completely, pickup the corner of the IC using a tweezers and remove the IC by moving with the IC desoldering machine. **(Refer to Fig. 3-3.)**

   NOTE

   Some ICs on the PCB are affixed with glue, so be careful not to break or damage the foil of each IC leads or solder lands under the IC when removing it.

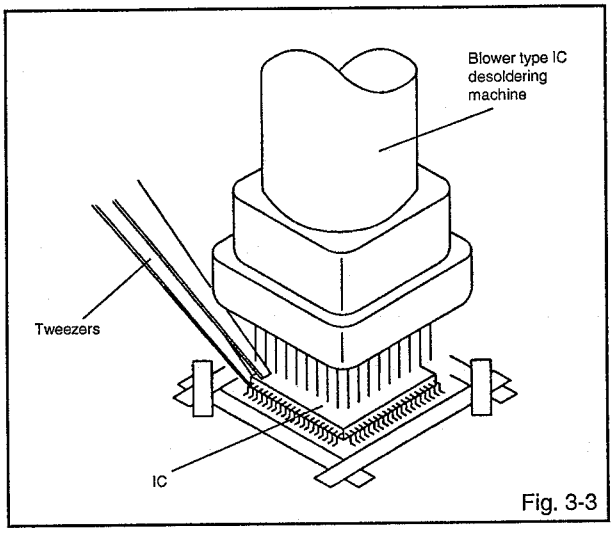

Fig. 3-3

4. Peel off the Masking Tape.

5. Absorb the solder left on the pattern using the Braided Shield Wire. **(Refer to Fig. 3-4.)**

   NOTE

   Do not move the Braided Shield Wire in the vertical direction towards the IC pattern.

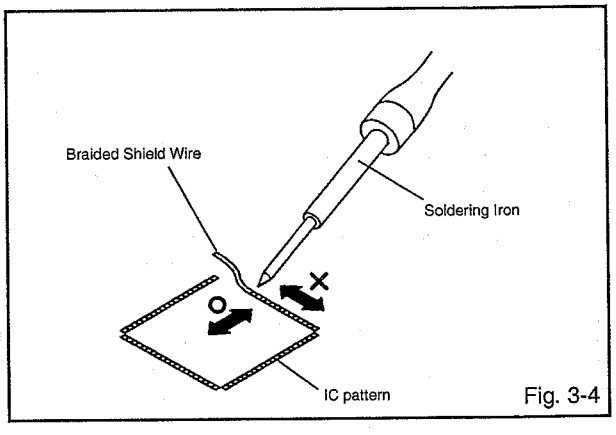

Fig. 3-4

DISASSEMBLY INSTRUCTIONS

INSTALLATION

1. Take care of the polarity of new IC and then install the new IC fitting on the printed circuit pattern. Then solder each lead on the diagonal positions of IC temporarily. **(Refer to Fig. 3-5.)**

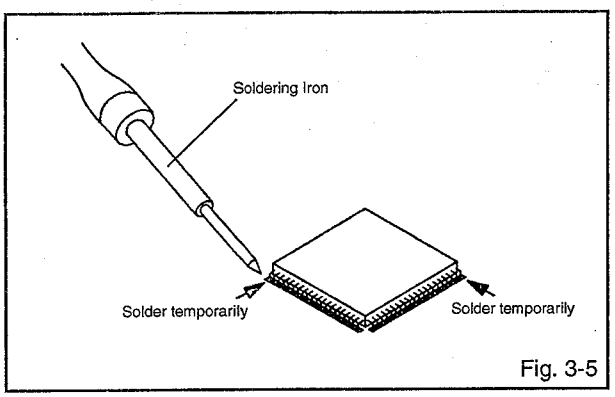

Fig. 3-5

2. Supply the solder from the upper position of IC leads sliding to the lower position of the IC leads. **(Refer to Fig. 3-6.)**

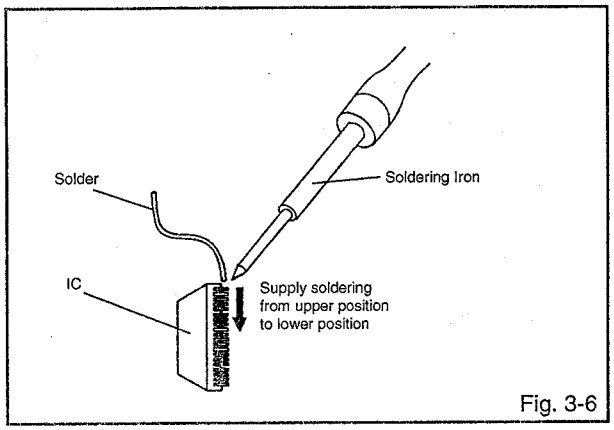

Fig. 3-6

3. Absorb the solder left on the lead using the Braided Shield Wire. **(Refer to Fig. 3-7.)**

   NOTE

   Do not absorb the solder to excess.

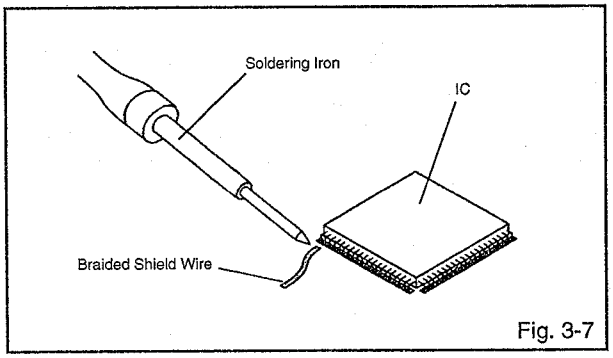

Fig. 3-7

4. When bridge-soldering between terminals and/or the soldering amount are not enough, resolder using a Thin-tip Soldering Iron. **(Refer to Fig. 3-8.)**

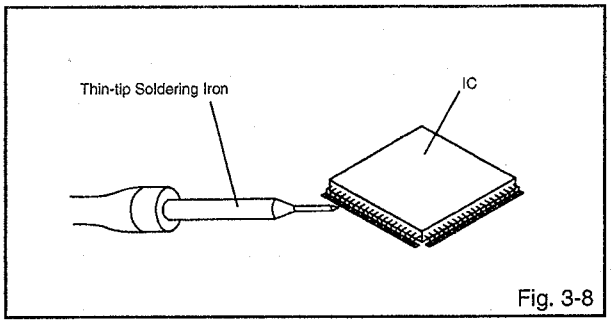

Fig. 3-8

5. Finally, confirm the soldering status on four sides of the IC using a magnifying glass.
   Confirm that no abnormality is found on the soldering position and installation position of the parts around the IC. If some abnormality is found, correct by resoldering.

   NOTE

   When the IC leads are bent during soldering and/or repairing, do not repair the bending of leads. If the bending of leads are repaired, the pattern may be damaged. So, be always sure to replace the IC in this case.

KEY TO ABBREVIATIONS

A	A/C	:	Audio/Control
	ACC	:	Automatic Color Control
	AE	:	Audio Erase
	AFC	:	Automatic Frequency Control
	AFT	:	Automatic Fine Tuning
	AFT DET	:	Automatic Fine Tuning Detect
	AGC	:	Automatic Gain Control
	AMP	:	Amplifier
	ANT	:	Antenna
	A.PB	:	Audio Playback
	APC	:	Automatic Phase Control
	ASS'Y	:	Assembly
	AT	:	All Time
	AUTO	:	Automatic
	A/V	:	Audio/Video
B	BGP	:	Burst Gate Pulse
	BOT	:	Beginning of Tape
	BPF	:	Bandpass Filter
	BRAKE SOL	:	Brake Solenoid
	BUFF	:	Buffer
	B/W	:	Black and White
C	C	:	Capacitance, Collector
	CASE	:	Cassette
	CAP	:	Capstan
	CARR	:	Carrier
	CH	:	Channel
	CLK	:	Clock
	CLOCK (SY-SE)	:	Clock (Syscon to Servo)
	COMB	:	Combination, Comb Filter
	CONV	:	Converter
	CPM	:	Capstan Motor
	CTL	:	Control
	CYL	:	Cylinder
	CYL-M	:	Cylinder-Motor
	CYL SENS	:	Cylinder-Sensor
D	DATA (SY-CE)	:	Data (Syscon to Servo)
	dB	:	Decibel
	DC	:	Direct Current
	DD Unit	:	Direct Drive Motor Unit
	DEMOD	:	Demodulator
	DET	:	Detector
	DEV	:	Deviation
E	E	:	Emitter
	EF	:	Emitter Follower
	EMPH	:	Emphasis
	ENC	:	Encoder
	ENV	:	Envelope
	EOT	:	End of Tape
	EQ	:	Equalizer
	EXT	:	External
F	F	:	Fuse
	FBC	:	Feed Back Clamp
	FE	:	Full Erase
	FF	:	Fast Forward, Flipflop
	FG	:	Frequency Generator
	FL SW	:	Front Loading Switch
	FM	:	Frequency Modulation
	FSC	:	Frequency Sub Carrier
	FWD	:	Forward
G	GEN	:	Generator
	GND	:	Ground
H	H.P.F	:	High Pass Filter
	H.SW	:	Head Switch
	Hz	:	Hertz
I	IC	:	Integrated Circuit
	IF	:	Intermediate Frequency
	IND	:	Indicator
	INV	:	Inverter
K	KIL	:	Killer
L	L	:	Left
	LED	:	Light Emitting Diode
	LIMIT AMP	:	Limiter Amplifier
	LM, LDM	:	Loading Motor
	LP	:	Long Play
	L.P.F	:	Low Pass Filter
	LUMI.	:	Luminance
M	M	:	Motor
	MAX	:	Maximum
	MINI	:	Minimum
	MIX	:	Mixer, mixing
	MM	:	Monostable Multivibrator
	MOD	:	Modulator, Modulation
	MPX	:	Multiplexer, Multiplex
	MS SW	:	Mecha State Switch
N	NC	:	Non Connection
	NR	:	Noise Reduction
O	OSC	:	Oscillator
	OPE	:	Operation
P	PB	:	Playback
	PB CTL	:	Playback Control
	PB-C	:	Playback-Chrominance
	PB-Y	:	Playback-Luminance
	PCB	:	Printed Circuit Board
	P. CON	:	Power Control
	PD	:	Phase Detector
	PG	:	Pulse Generator
	P-P	:	Peak-to Peak
R	R	:	Right
	REC	:	Recording
	REC-C	:	Recording-Chrominance
	REC-Y	:	Recording-Luminance
	REEL BRK	:	Reel Brake
	REEL S	:	Reel Sensor
	REF	:	Reference
	REG	:	Regulated, Regulator
	REW	:	Rewind
	REV, RVS	:	Reverse
	RF	:	Radio Frequency
	RMC	:	Remote Control
	RY	:	Relay
S	S. CLK	:	Serial Clock
	S. COM	:	Sensor Common
	S. DATA	:	Serial Data
	SEG	:	Segment
	SEL	:	Select, Selector
	SENS	:	Sensor
	SER	:	Search Mode
	SI	:	Serial Input
	SIF	:	Sound Intermediate Frequency
	SO	:	Serial Output
	SOL	:	Solenoid
	SP	:	Standard Play
	STB	:	Serial Strobe
	SW	:	Switch

KEY TO ABBREVIATIONS

S	SYNC	:	Synchronization
	SYNC SEP	:	Sync Separator, Separation
T	TR	:	Transistor
	TRAC	:	Tracking
	TRICK PB	:	Trick Playback
	TP	:	Test Point
U	UNREG	:	Unregulated
V	V	:	Volt
	VCO	:	Voltage Controlled Oscillator
	VIF	:	Video Intermediate Frequency
	VP	:	Vertical Pulse, Voltage Display
	V.PB	:	Video Playback
	VR	:	Variable Resistor
	V.REC	:	Video Recording
	VSF	:	Visual Search Fast Forward
	VSR	:	Visual Search Rewind
	VSS	:	Voltage Super Source
	V-SYNC	:	Vertical-Synchronization
	VT	:	Voltage Tuning
X	X'TAL	:	Crystal
Y	Y/C	:	Luminance/Chrominance

SERVICE MODE LIST

This unit provided with the following SERVICE MODES so you can repair, examine and adjust easily.

To enter to the SERVICE MODE function, press and hold both buttons simultaneously on the main unit or on the main unit and on the remote control for more than a standard time (second).

Set Key	Set Key	Standard Time (seconds)	Operations
CH UP	FF	2	PLAY/REC total hours are displayed on the FIP. Refer to the "PREVENTIVE CHECKS AND SERVICE INTERVALS" (CONFIRMATION OF HOURS USED). Can be checked of the INITIAL DATA of MEMORY IC. Refer to the "WHEN REPLACING EEPROM (MEMORY) IC".
CH UP	STOP	2	Adjust the PG SHIFTER automatically. Refer to the "ELECTRICAL ADJUSTMENT" (PG SHIFTER).
CH UP	PLAY	2	Initialization of the factory on VCR. NOTE: Do not use this for the normal servicing. If you set a factory initialization, the memories are reset such as the clock setting, the channel setting, and PLAY/REC total hours.
CH DOWN	POWER	2	VCR operation mode at no connection of DVD. Refer to the "PREPARATION FOR SERVICING" NOTE: Although the DVD is connected, the DVD mode cannot be selected.

Set Key	Remocon Key	Standard Time (seconds)	Operations
REC	4	2	Initialization of the factory on DVD. NOTE: Do not use this for the normal servicing. The function will only work without the setting of DVD disc at DVD mode. While pressing the Remocon Key for more than the Standard Time, press the Set Key simultaneously.

Method	Operations
Press the ATR button on the remote control for more than 2 seconds during PLAY.	Adjusting of the Tracking to the center position. Refer to the "MECHANICAL ADJUSTMENT" (GUIDE ROLLER) and "ELECTRICAL ADJUSTMENT" (PG SHIFTER).
Make the short circuit between the test point of SERVICE and the GND.	The BOT, EOT, and the Reel Sensor do not work and the VCR deck can be operated without a cassette tape. Refer to the "PREPARATION FOR SERVICING"

PREVENTIVE CHECKS AND SERVICE INTERVALS

The following standard table depends on environmental conditions and usage.
Parts replacing time does not mean the life span for individual parts.
Also, long term storage or misuse may cause transformation and aging of rubber parts.
The following list means standard hours, so the checking hours depends on the conditions.

Parts Name \ Time	500 hours	1,000 hours	1,500 hours	2,000 hours	2,500 hours	Notes
Audio Control Head	■	■	■	●	●	Clean those parts in contact with the tape.
Full Erase Head (Recorder only)	■	■	■	●	●	
Capstan Belt		●	●	●	●	Clean the rubber, and parts which the rubber touches.
Pinch Roller	■	●	●	●	●	
Capstan DD Unit		●	●	●	●	
Loading Motor					●	
Tension Band		●	●	●	●	
T Brake Band		●	●	●	●	
Clutch Ass'y		●	●	●	●	
Idler Arm Ass'y		●	●	●	●	
Capstan Shaft	■	■	■	■	■	
Tape Running Guide Post	■	■	■	■	■	Replace when rolling becomes abnormal.
Cylinder Unit	■	●	●	●	●	Clean the Head

■ : Clean
● : Check it and if necessary, replace it.

CONFIRMATION OF HOURS USED

PLAY/REC total hours can be checked on the FIP.
Total hours are displayed in 16 system of notation.

NOTE: If you set a factory initialization, the total hours is reset to "0".

1. Turn on the POWER.
2. While pressing the CH UP button on the set, press the FF button on the set for more than 2 seconds.
3. Adjust the ADDRESS to "FD" by TRACKING + or - button and read the DATA.
   (This DATA becomes the thousands digit and hundreds digit value of the following formula.)
4. Adjust the ADDRESS to "FE" by TRACKING + or - button and read the DATA.
   (This DATA becomes the tens digit and ones digit value of the following formula.)
5. After the confirmation of using hours, turn off the power.

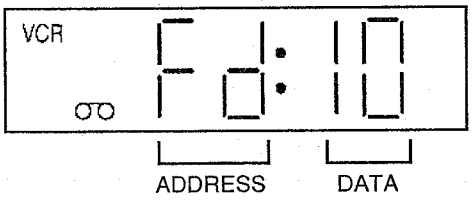

(16 x 16 x 16 x thousands digit value) + (16 x 16 x hundreds digit value) + (16 x tens digit value) + (ones digit value)

PREVENTIVE CHECKS AND SERVICE INTERVALS

CLEANING

NOTE

After cleaning the heads with isopropyl alcohol, do not run a tape until the heads dry completely. If the heads are not completely dry and alcohol gets on the tape, damage may occur.

1. AUDIO CONTROL HEAD

Clean the Audio Control Head with the cotton stick soaked by alcohol. Clean the full erase head in the same manner. **(Refer to the figure below.)**

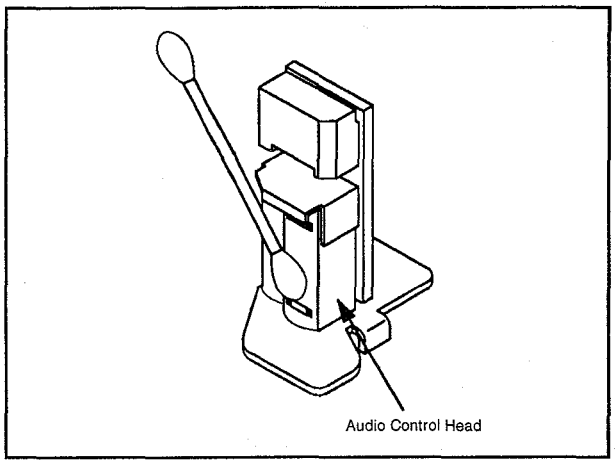

2. TAPE RUNNING SYSTEM

When cleaning the tape transport system, use the gauze moistened with isopropyl alcohol.

3. CYLINDER

Wrap a piece of chamois around your finger. Dip it in isopropyl alcohol. Hold it to the cylinder head softly. Turn the cylinder head counterclockwise to clean it (in the direction of the arrow). **(Refer to the figure below.)**

NOTE

Do not exert force against the cylinder head. Do not move the chamois upward or downward on the head.
Use the chamois one by one.

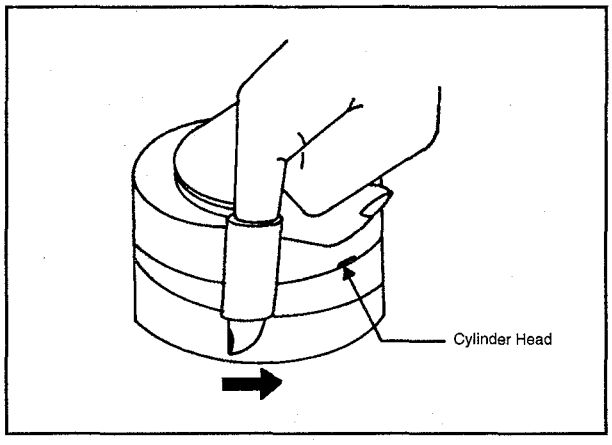

WHEN REPLACING EEPROM (MEMORY) IC

If a service repair is undertaken where it has been required to change the MEMORY IC, the following steps should be taken to ensure correct data settings while making reference to TABLE 1.

NOTE: No need setting for after INI FD.

INI	+0	+1	+2	+3	+4	+5	+6	+7	+8	+9	+A	+B	+C	+D	+E	+F
C0	B2	17	00	00	00	F1	50	51	00	51	B2	9F	97	8E	40	42
D0	DB	62	06	08	01	FF	00	00	71	9F	82	0A	42	35	63	5B
E0	76	5E	08	F0	01	F3	00	00	00	00	00	5F	09	F0	05	F3
F0	02	2F	9F	42	42	80	3D	68	08	89	00	3A	99	---	---	---

Table 1

1. Turn on the POWER.
2. Press both CH UP button on the set and the FF button on the set for more than 2 seconds.
   ADDRESS and DATA will appear on FIP as Fig 1.

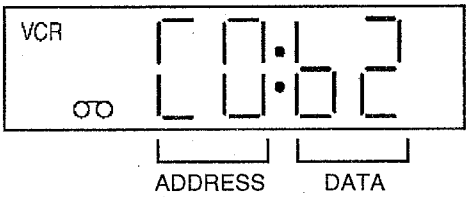

Fig. 1

3. ADDRESS is now selected and should "blink". Using the TRACKING + or - button on the remote, step through the ADDRESS until required ADDRESS to be changed is reached.
4. Press ENTER to select DATA. When DATA is selected, it will "blink".
5. Again, step through the DATA using TRACKING + or - button until required DATA value has been selected.
6. Pressing ENTER will take you back to ADDRESS for further selection if necessary.
7. Repeat steps 3 to 6 until all data has been checked.
8. When satisfied correct DATA has been entered, turn POWER off (return to STANDBY MODE) to finish DATA input.

The unit will now have the correct DATA for the new MEMORY IC.

SERVICING FIXTURES AND TOOLS

(For 2 head 1 speed model, 4 head model) VHS Alignment Tape JG001E (VP_1S-LI6^3) JG001F (VP_1S-CO1^3) JG001R (VP_1S-LI6^{3}H) JG001U (VP_1S-X6^3) 	**(For 2 head 2 speed model)** VHS Alignment Tape JG001C (VP_2S-LI6^3) JG001D (VP_2S-CO1^3) JG001V (VP_2S-X6^3) 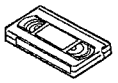	JG002B Adapter JG002E Dial Torque Gauge (10~90gf•cm) JG002F (60~600gf•cm) 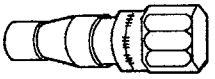	JG005 Post Adjustment Screwdriver Part No. SV-TG0-030-000 (small) 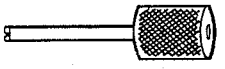
JG153 X Value Adjustment Screwdriver 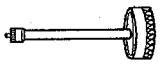	JG022 Master Plane 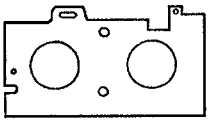	JG024A Reel Disk Height Adjustment Jig 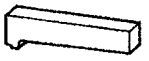	JG100A Torque Tape (VHT-063) 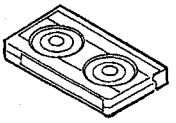
JG154 Cable 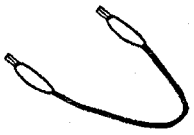	Tentelometer 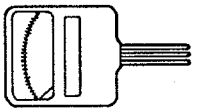		

Ref. No.	Part No.	Parts Name	Remarks
JG001E	APJG001E00	VHS Alignment Tape	Monoscope, 6KHz **(For 2 head 1 speed model, 4 head model)**
JG001F	APJG001F00	VHS Alignment Tape	Color Bar, 1KHz **(For 2 head 1 speed model, 4 head model)**
JG001R	APJG001R00	VHS Alignment Tape	Hi-Fi Audio **(For Hi-Fi model)**
JG001U	APJG001U00	VHS Alignment Tape	X Value Adjustment **(For 2 head 1 speed model, 4 head model)**
JG001C	APJG001C00	VHS Alignment Tape	Monoscope, 6KHz **(For 2 head 2 speed model)**
JG001D	APJG001D00	VHS Alignment Tape	Color Bar, 1KHz **(For 2 head 2 speed model)**
JG001V	APJG001V00	VHS Alignment Tape	X Value Adjustment **(For 2 head 2 speed model)**
JG002B	APJG002B00	Adapter	VSR Torque, Brake Torque (S Reel/T Reel Ass'y)
JG002E	APJG002E00	Dial Torque Gauge (10~90gf•cm)	Brake Torque (T Reel Ass'y)
JG002F	APJG002F00	Dial Torque Gauge (60~600gf•cm)	VSR Torque, Brake Torque (S Reel)
JG005	APJG005000	Post Adjustment Screwdriver	Guide Roller Adjustment
JG153	APJG153000	X Value Adjustment Screwdriver	X Value Adjustment
JG022	APJG022000	Master Plane	Reel Disk Height Adjustment
JG024A	APJG024A00	Reel Disk Height Adjustment Jig	Reel Disk Height Adjustment
JG100A	APJG100A00	Torque Tape (VHT-063)	Playback Torque, Back Tension Torque During Playback
JG154	APJG154000	Cable	Used to connect the test point of SERVICE and GROUND

PREPARATION FOR SERVICING

How to use the Servicing Fixture

1. While pressing the POWER button on the set for more than 2 seconds, press the CH DOWN button on the set simultaneously at the Power OFF. Although the DVD is connected, the DVD mode cannot be selected.
2. Short circuit between **TP3001** and **Ground** with the cable JG154.
   (The BOT, EOT, and the Reel Sensor do not work and the VCR deck can be operated without a cassette tape.)
3. In case of using a cassette tape, press the EJECT button to insert or eject a cassette tape.
   Turn on the power and re-check the cable before checking the trouble points.

When you servicing with connection of DVD, perform the operations above step 2 to step 3.

MECHANICAL ADJUSTMENTS

1. CONFIRMATION AND ADJUSTMENT

Read the following NOTES before starting work.

- Place an object which weighs between 450g~500g on the Cassette Tape to keep it steady when you want to make the tape run without the Cassette Holder. (Do not place an object which weighs over 500g.)

1-1: CONFIRMATION AND ADJUSTMENT OF REEL DISK HEIGHT

1. Turn on the power and set to the STOP mode.
2. Set the master plane **(JG022)** and reel disk height adjustment jig **(JG024A)** on the mechanism framework, taking care not to scratch the drum, as shown in **Fig. 1-1-A**.
3. While turning the reel and confirm the following points. Check if the surface "A" of reel disk is lower than the surface "B" of reel disk height adjustment jig **(JG024A)** and is higher than the surface "C". If it is not passed, place the height adjustment washers and adjust to 10(+2, -0)mm.
4. Adjust the other reel in the same way.

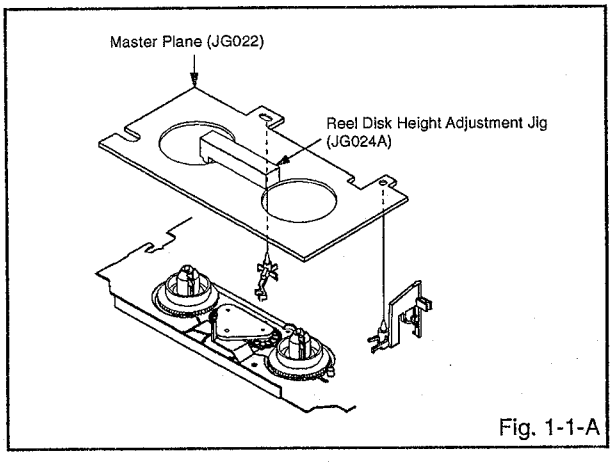

Fig. 1-1-A

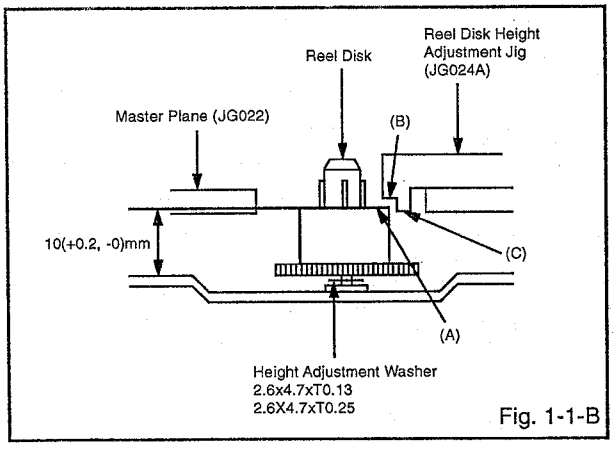

Fig. 1-1-B

1-2: CONFIRMATION AND ADJUSTMENT OF TENSION POST POSITION

1. Set to the PLAY mode.
2. Adjust the adjusting section for the Tension Arm position so that the Tension Arm top is within the standard line of Main Chassis.
3. While turning the S Reel clockwise, confirm that the edge of the Tension Arm is located in the position described above.

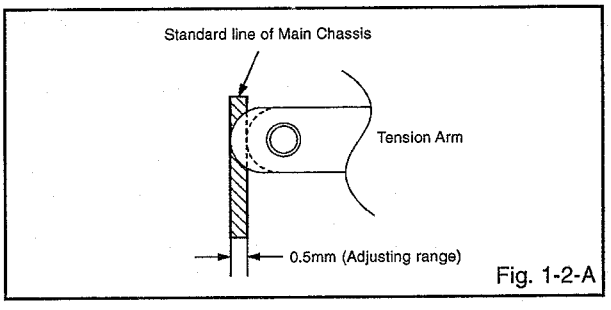

Fig. 1-2-A

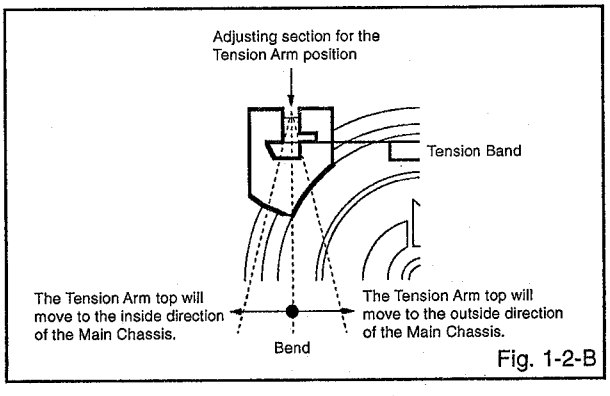

Fig. 1-2-B

1-3: CONFIRMATION OF PLAYBACK TORQUE AND BACK TENSION TORQUE DURING PLAYBACK

1. Load a video tape (E-180) recorded in standard speed mode. Set the unit to the PLAY mode.
2. Install the tentelometer as shown in **Fig. 1-3**. Confirm that the meter indicates 20 ± 2gf in the beginning of playback.

• USING A CASSETTE TYPE TORQUE TAPE **(JG100A)**

1. After confirmation and adjustment of Tension Post position **(Refer to item 1-2)**, load the cassette type torque tape **(JG100A)** and set to the PLAY mode.
2. Confirm that the right meter of the torque tape indicates 50~90gf•cm during playback in SP mode.
3. Confirm that the left meter of the torque tape indicates 25~40gf•cm during playback in SP mode.

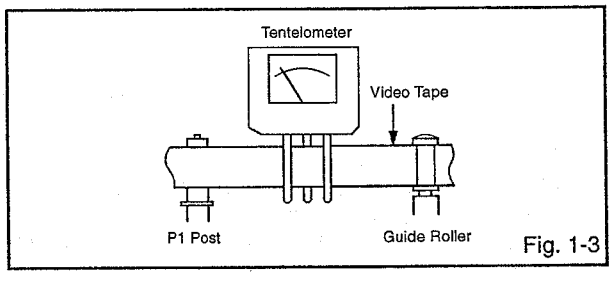

Fig. 1-3

MECHANICAL ADJUSTMENTS

1-4: CONFIRMATION OF VSR TORQUE

1. Install the Torque Gauge **(JG002F)** and Adapter **(JG002B)** on the S Reel. Set to the Picture Search (Rewind) mode. **(Refer to Fig.1-4-B)**
2. Then, confirm that it indicates 120~180gf•cm.

NOTE

Install the Torque Gauge on the reel disk firmly. Press the REW button to turn the reel disk.

1-5: CONFIRMATION OF REEL BRAKE TORQUE

(S Reel Brake) **(Refer to Fig. 1-4-B)**

1. Once set to the Fast Forward mode then set to the Stop mode. While, unplug the AC cord when the Pinch Roller Block is on the position of **Fig. 1-4-A.**
2. Move the Idler Ass'y from the S Reel.
3. Install the Torque Gauge **(JG002F)** and Adapter **(JG002B)** on the S Reel. Turn the Torque Gauge **(JG002F)** clockwise.
4. Then, confirm that it indicates 60~100gf•cm.

(T Reel Brake) **(Refer to Fig. 1-4-B)**

1. Once set to the Fast Forward mode then set to the Stop mode. While, unplug the AC cord when the Pinch Roller Block is on the position of **Fig. 1-4-A.**
2. Move the Idler Ass'y from the T Reel.
3. Install the Torque Gauge **(JG002E)** and Adapter **(JG002B)** on the T reel. Turn the Torque Gauge **(JG002E)** counterclockwise.
4. Then, confirm that it indicates 30~50gf•cm.

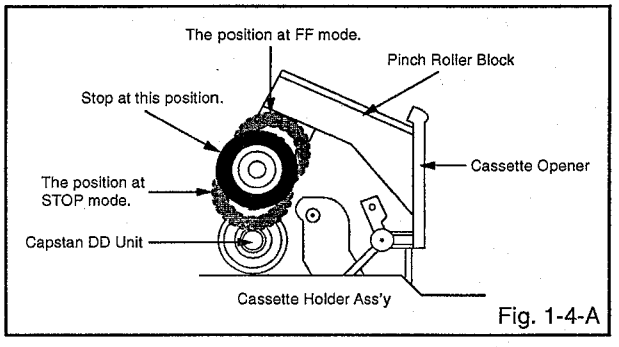

Fig. 1-4-A

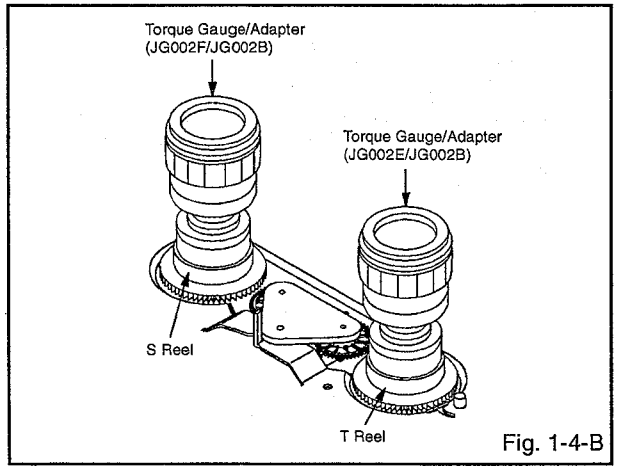

Fig. 1-4-B

NOTE

If the torque is out of the range, replace the following parts.

Check item	Replacement Part
1-4	Idler Ass'y/Clutch Ass'y
1-5	S Reel side: S Reel/Tension Band/Tension Connect/Tension Arm Ass'y T Reel side: T Reel/T Brake Band//T Brake Spring/T Brake Arm

2. CONFIRMATION AND ADJUSTMENT OF TAPE RUNNING MECHANISM

Tape Running Mechanism is adjusted precisely at the factory. Adjustment is not necessary as usual. When you replace the parts of the tape running mechanism because of long term usage or failure, the confirmation and adjustment are necessary.

2-1: GUIDE ROLLER

1. Playback the VHS Alignment Tape **(JG001C or JG001E). (Refer to SERVICING FIXTURE AND TOOLS)**
2. Connect CH-1 of the oscilloscope to **TP102 (Envelope)** and CH-2 to **TP101 (SW Pulse).**
3. Press and hold the Tracking-Auto button on the remote control more than 2 seconds to set tracking to center.
4. Trigger with SW Pulse and observe the envelope. **(Refer to Fig. 2-1-A)**
5. When observing the envelope, adjust the Adjusting Driver **(JG005)** slightly until the envelope will be flat. Even if you press the Tracking Button, adjust so that flatness is not moved so much.
6. Adjust so that the A : B ratio is better than 3 : 2 as shown in **Fig. 2-1-B**, even if you press the Tracking Button to move the envelope (The envelope waveform will begin to decrease when you press the Tracking Button).
7. Adjust the PG shifter during playback. **(Refer to the ELECTRICAL ADJUSTMENTS)**

NOTE

After adjustment, confirm and adjust A/C head. **(Refer to item 2-2)**

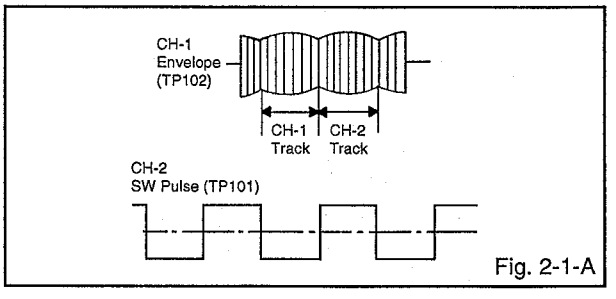

Fig. 2-1-A

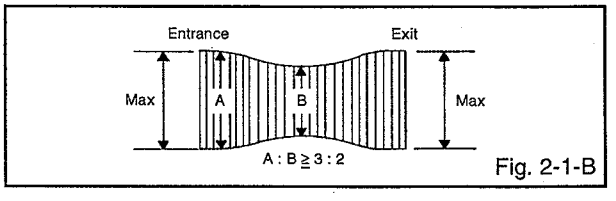

Fig. 2-1-B

MECHANICAL ADJUSTMENTS

2-2: CONFIRMATION AND ADJUSTMENT OF AUDIO/ CONTROL HEAD

When the Tape Running Mechanism does not work well, adjust the following items.

1. Playback the VHS Alignment Tape **(JG001C or JG001E). (Refer to SERVICING FIXTURE AND TOOLS)**
2. Confirm that the reflected picture of stamp mark is appeared on the tape prior to P4 Post as shown in **Fig. 2-2-A.**
   a) When the reflected picture is distorted, turn the screw ① clockwise until the distortion is disappeared.
   b) When the reflected picture is not distorted, turn the screw ① counterclockwise until little distortion is appeared, then adjust the a).
3. Turn the screw ② to set the audio level to maximum.
4. Confirm that the bottom of the Audio/ Control Head and the bottom of the tape is shown in **Fig. 2-2-C.**
   c) When the height is not correct, turn the screw ③ to adjust the height. Then, adjust the 1~3 again.

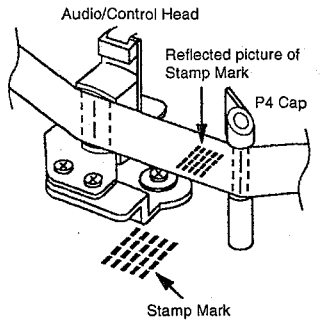

Fig. 2-2-A

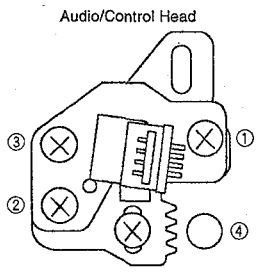

Fig. 2-2-B

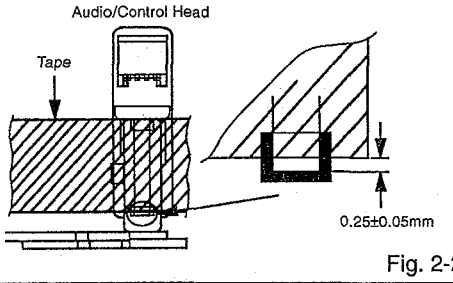

Fig. 2-2-C

2-3: TAPE RUNNING ADJUSTMENT (X VALUE ADJUSTMENT)

1. Confirm and adjust the height of the Reel Disk. **(Refer to item 1-1)**
2. Confirm and adjust the position of the Tension Post. **(Refer to item 1-2)**
3. Adjust the Guide Roller. **(Refer to item 2-1)**
4. Confirm and adjust the Audio/Control Head. **(Refer to item 2-2)**
5. Connect CH-1 of the oscilloscope to **TP101**, CH-2 to **TP102** and CH-3 to **HOT side of Audio Out Jack.**
6. Playback the VHS Alignment Tape **(JG001U or JG001V). (Refer to SERVICING FIXTURE AND TOOLS)**
7. Press and hold the Tracking-Auto button on the remote control more than 2 seconds to set tracking to center.
8. Set the X Value adjustment driver **(JG153)** to the ④ of **Fig. 2-2-B.** Adjust X value so that the envelope waveform output becomes maximum. Check if the relation between Audio and Envelope waveform becomes (1) or (2) of **Fig. 2-3.**

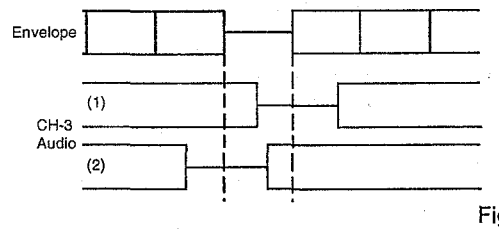

Fig. 2-3

2-4: CONFIRM HI-FI AUDIO (Hi-Fi model only)

1. Connect CH-1 of the oscilloscope to **TP102** and CH-2 to the **Hi-Fi Audio Out Jack.**
2. Playback the VHS Alignment Tape **(JG001R). (Refer to SERVICING FIXTURE AND TOOLS)**
3. Press and hold the Tracking-Auto button on the remote control more than 2 seconds to set tracking to center.
4. Press the Tracking Up button and count number of steps which the audio output is changed from Hi-Fi (10KHz) to MONO (6KHz).
5. Press and hold the Tracking-Auto button on the remote control more than 2 seconds to set tracking to center.
6. Press the Tracking Down button and count number of steps which the audio output is changed from Hi-Fi (10KHz) to MONO (6KHz).
7. If the difference are more than 3 steps, set the X Value adjustment driver **(JG153)** to ④ of **Fig. 2-2-B.** Change the X Value and adjust it so that the value becomes within 2 steps.

MECHANICAL ADJUSTMENTS

3. MECHANISM ADJUSTMENT PARTS LOCATION GUIDE

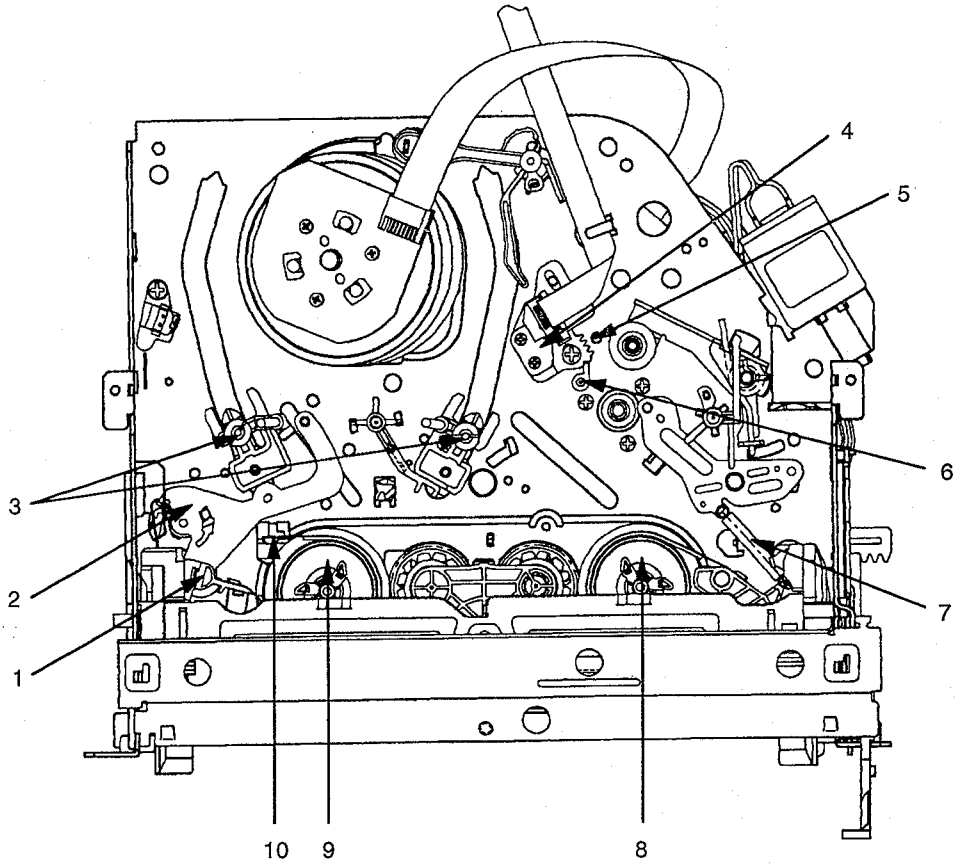

1. Tension Connect
2. Tension Arm
3. Guide Roller
4. Audio/Control Head
5. X value adjustment driver hole
6. P4 Post
7. T Brake Spring
8. T Reel
9. S Reel
10. Adjusting section for the Tension Arm position

ELECTRICAL ADJUSTMENTS

Read and perform this adjustment when repairing the circuits or replacing electrical parts or PCB assemblies.

1. BASIC ADJUSTMENT

CAUTION

When you exchange IC and Transistor for a heat sink, apply the silicon grease **(YG6260M)** on the contact section of the heat sink. Before applying new silicon grease, remove all the old silicon grease. (Old grease may cause damages to the IC and Transistor.)

1-1: PG SHIFTER

CONDITIONS

MODE-PLAYBACK
Input Signal-Alignment Tape **(JG001E)**

INSTRUCTIONS

1. Connect CH-1 on the oscilloscope to **TP101** and CH-2 to **pin 19 of J8005.**
2. Playback the alignment tape. **(JG001E)**
3. Press and hold the Tracking-Auto button on the remote control more than 2 seconds to set tracking to center.
4. Press both CH UP button on the set and the STOP button on the set for more than 2 seconds.

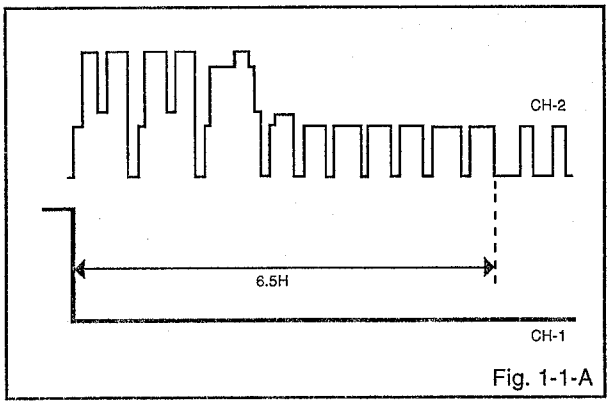

Fig. 1-1-A

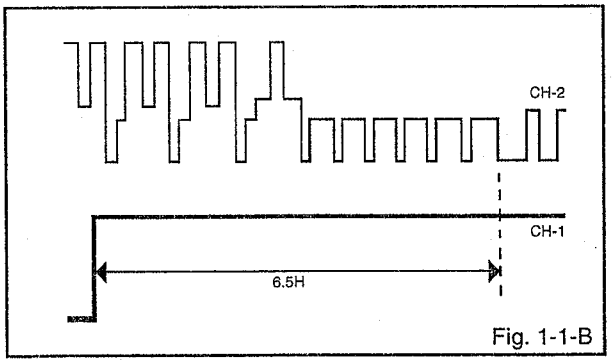

Fig. 1-1-B

ELECTRICAL ADJUSTMENTS

2. ELECTRICAL ADJUSTMENT PARTS LOCATION GUIDE (WIRING CONNECTION)

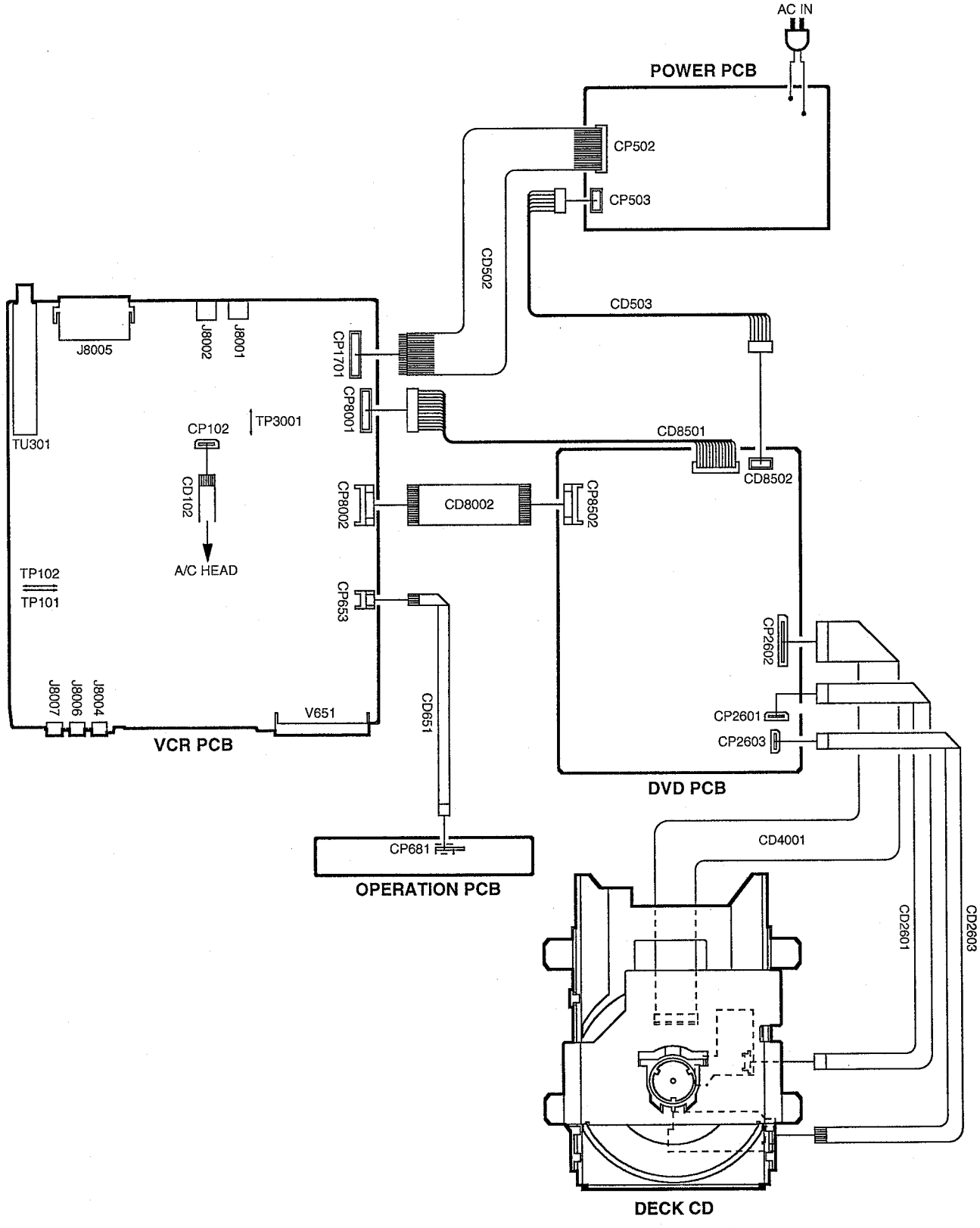

Zentralwerkstatt und
Ersatzteildepot
für ORION-Produkte

Schwalbe
Service & Versand GmbH

Postfach 10 10 26
63264 Dreieich
Max-Planck-Str. 20
63303 Dreieich

Ersatzteil-Bestellung
Tel.: (06103) 39 99-95 Fax.: (06103) 39 99-79

SERVICE MANUAL

Nachdruck bzw. Kopieren dieser Unterlagen ist grundsätzlich verboten!

Teil 2

ORION

DVD/VR-2951 / 2953

DVD VIDEO PLAYER & VHS VIDEO CASSETTE RECORDER

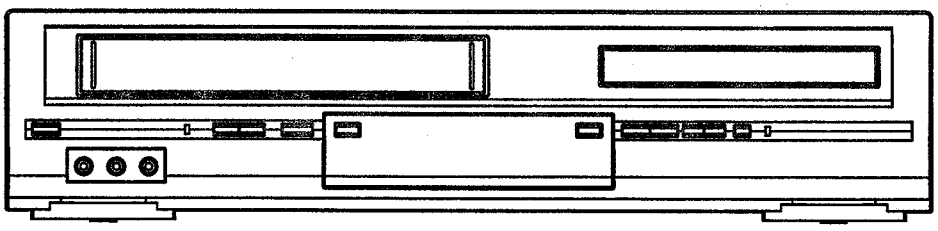

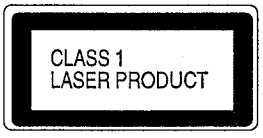

ORIGINAL
CHASSIS CODE A

Best. Nr. SM2951-2

Design and specifications are subject to change without notice.

DVD BLOCK DIAGAM

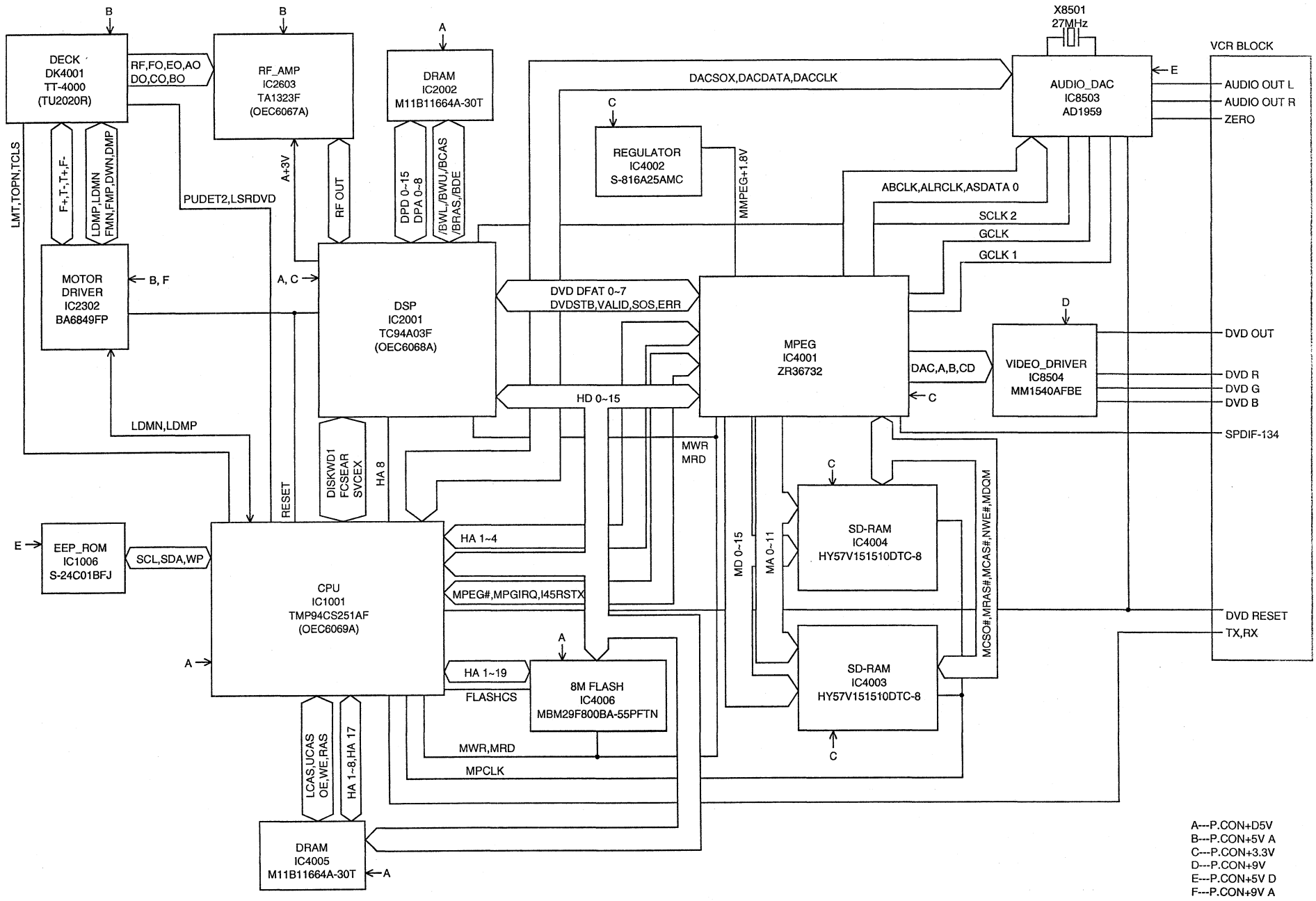

Y/C/AUDIO/HEAD AMP BLOCK DIAGRAM

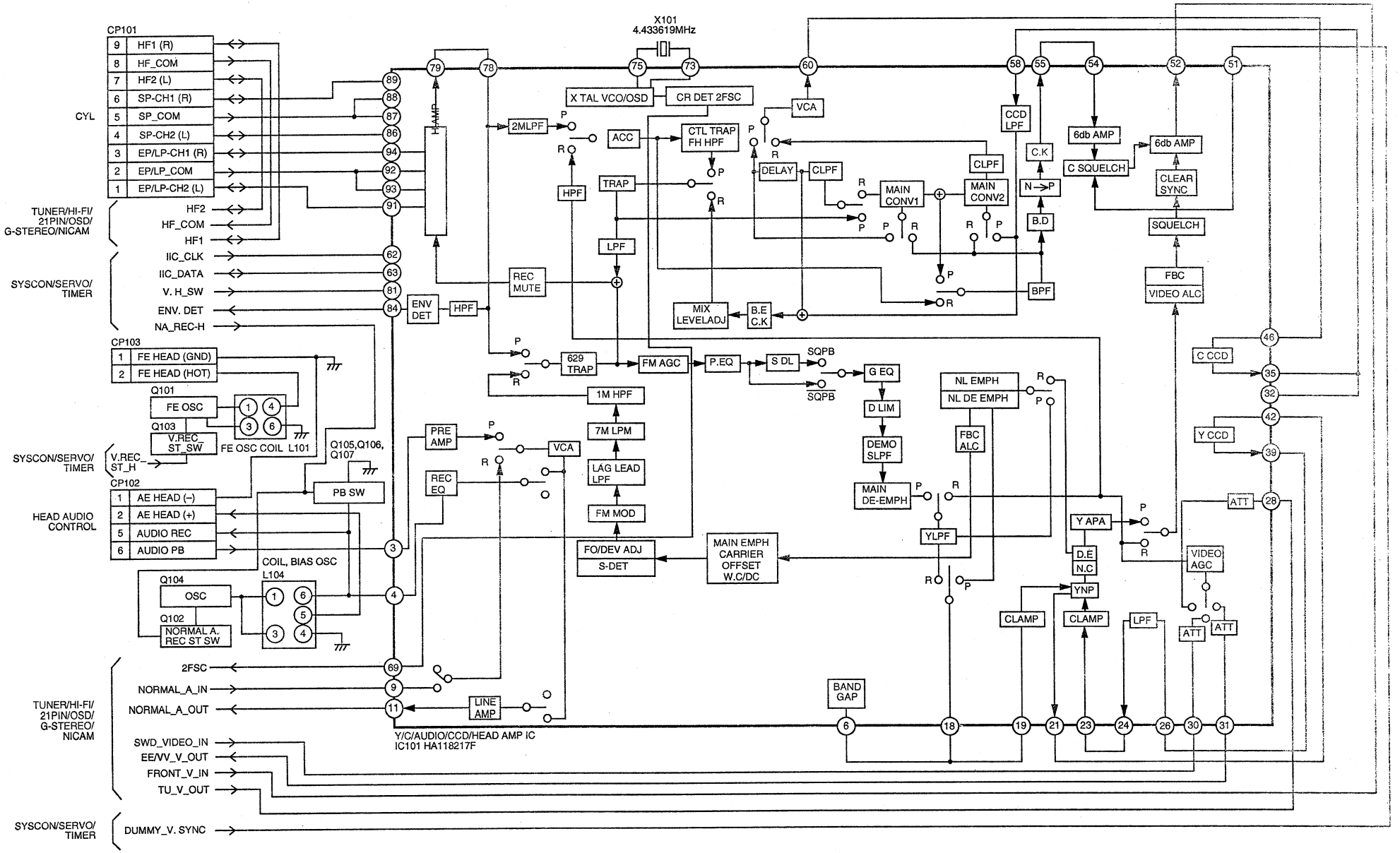

SYSTEM CONTROL/SERVO/TIMER BLOCK DIAGRAM
(SYSCON 2)

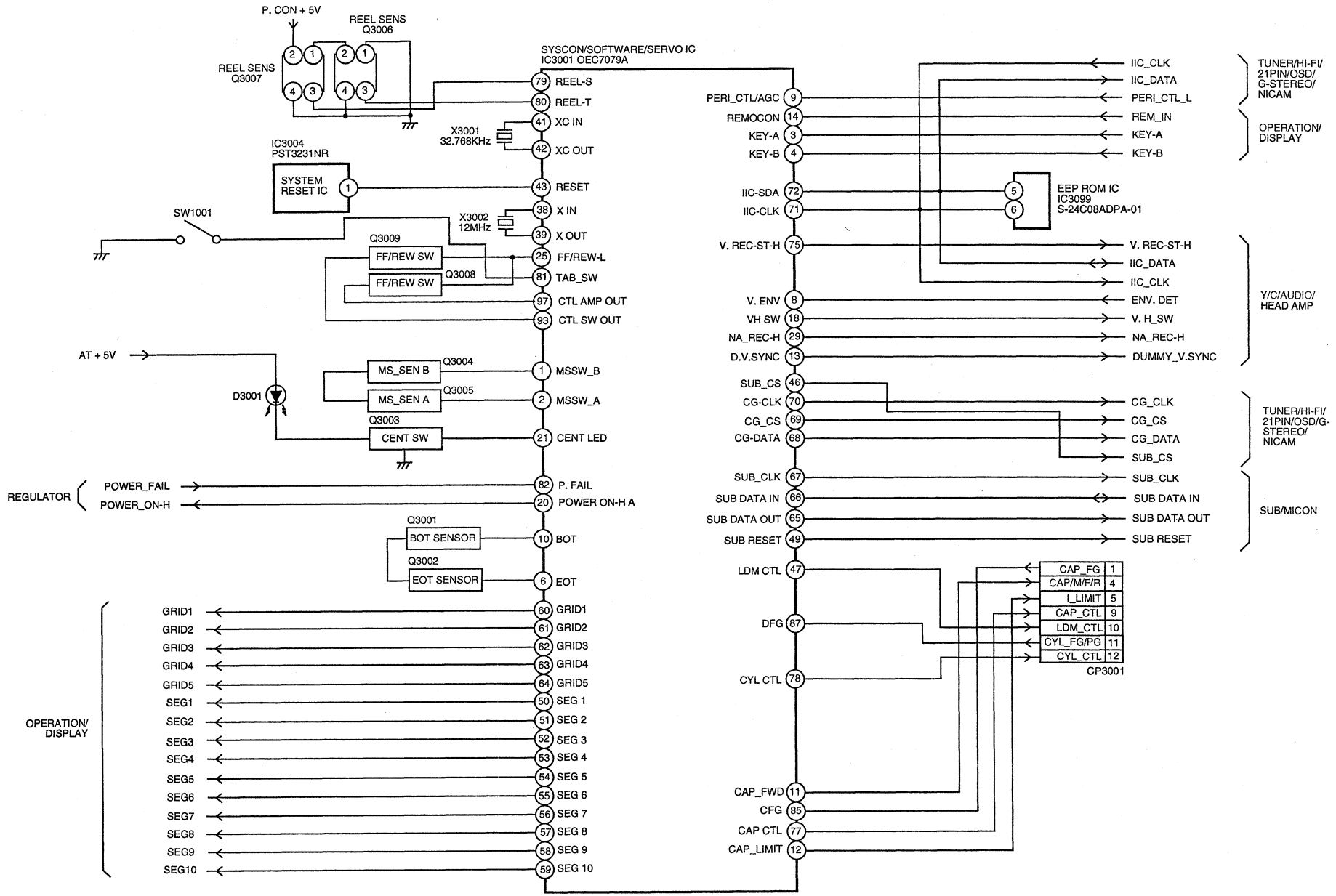

REGULATOR BLOCK DIAGRAM

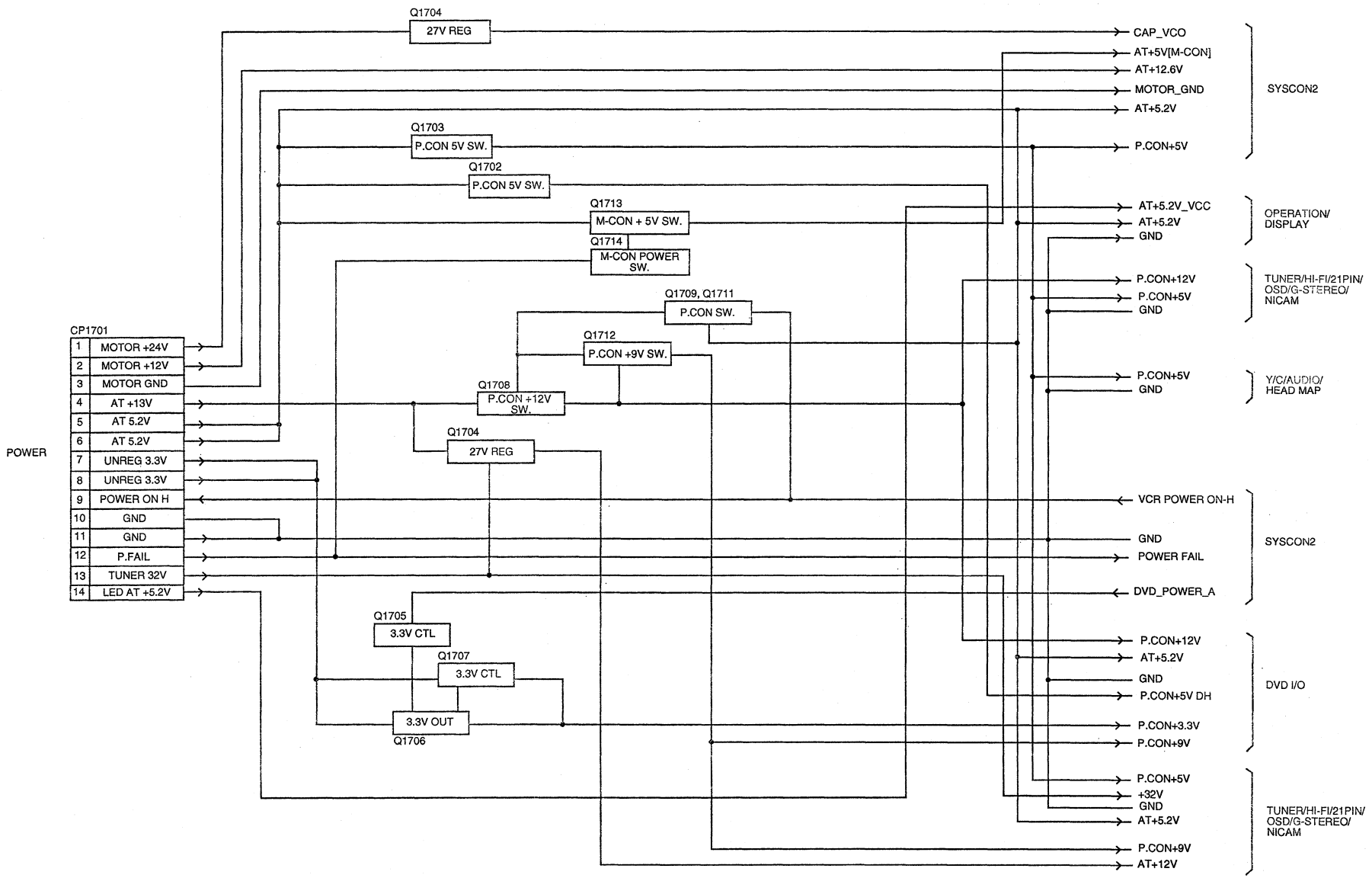

OPERATION/DISPLAY BLOCK DIAGRAM

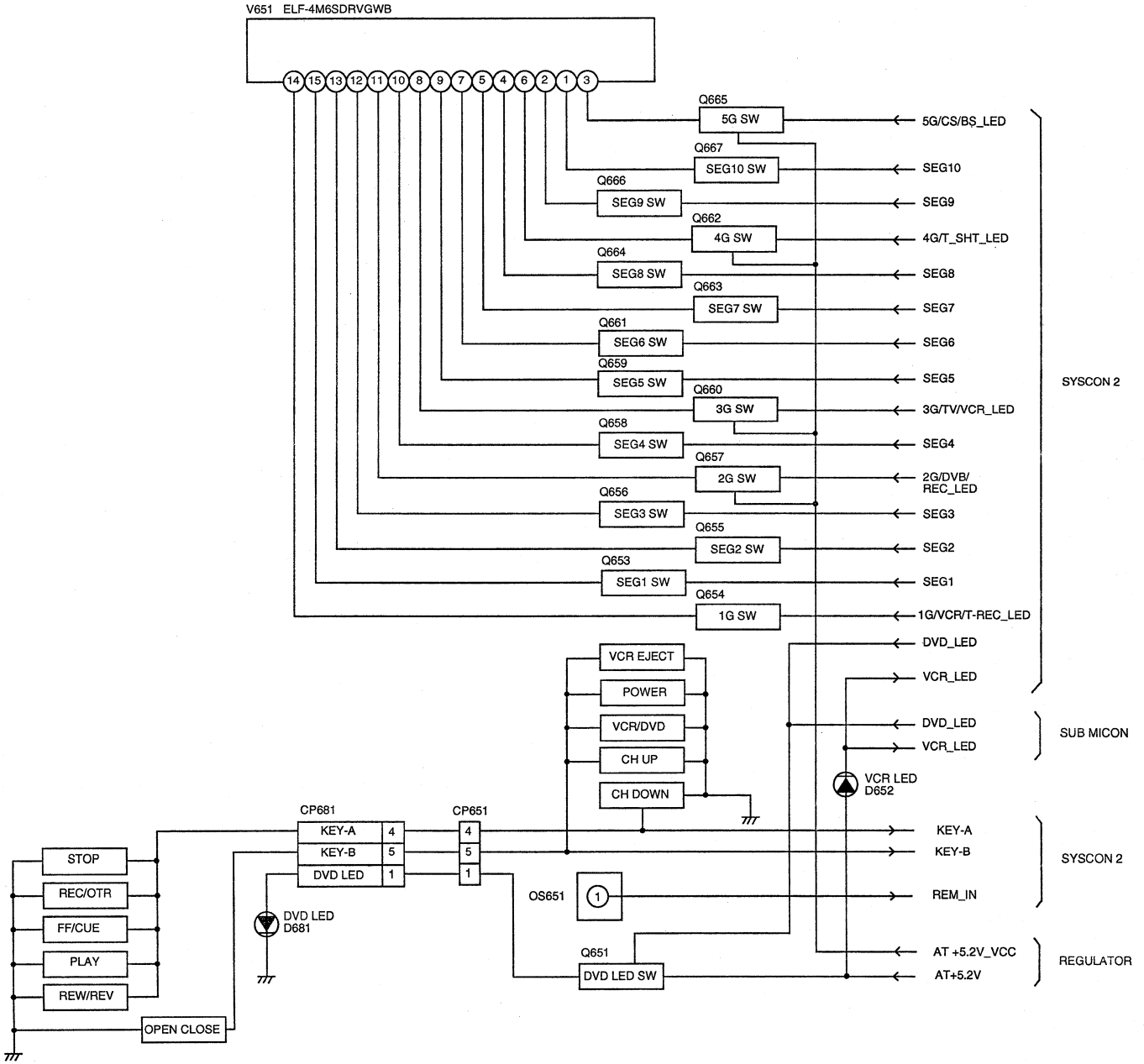

TUNER/HI-FI/21PIN/OSD/G-STEREO/NICAM BLOCK DIAGRAM

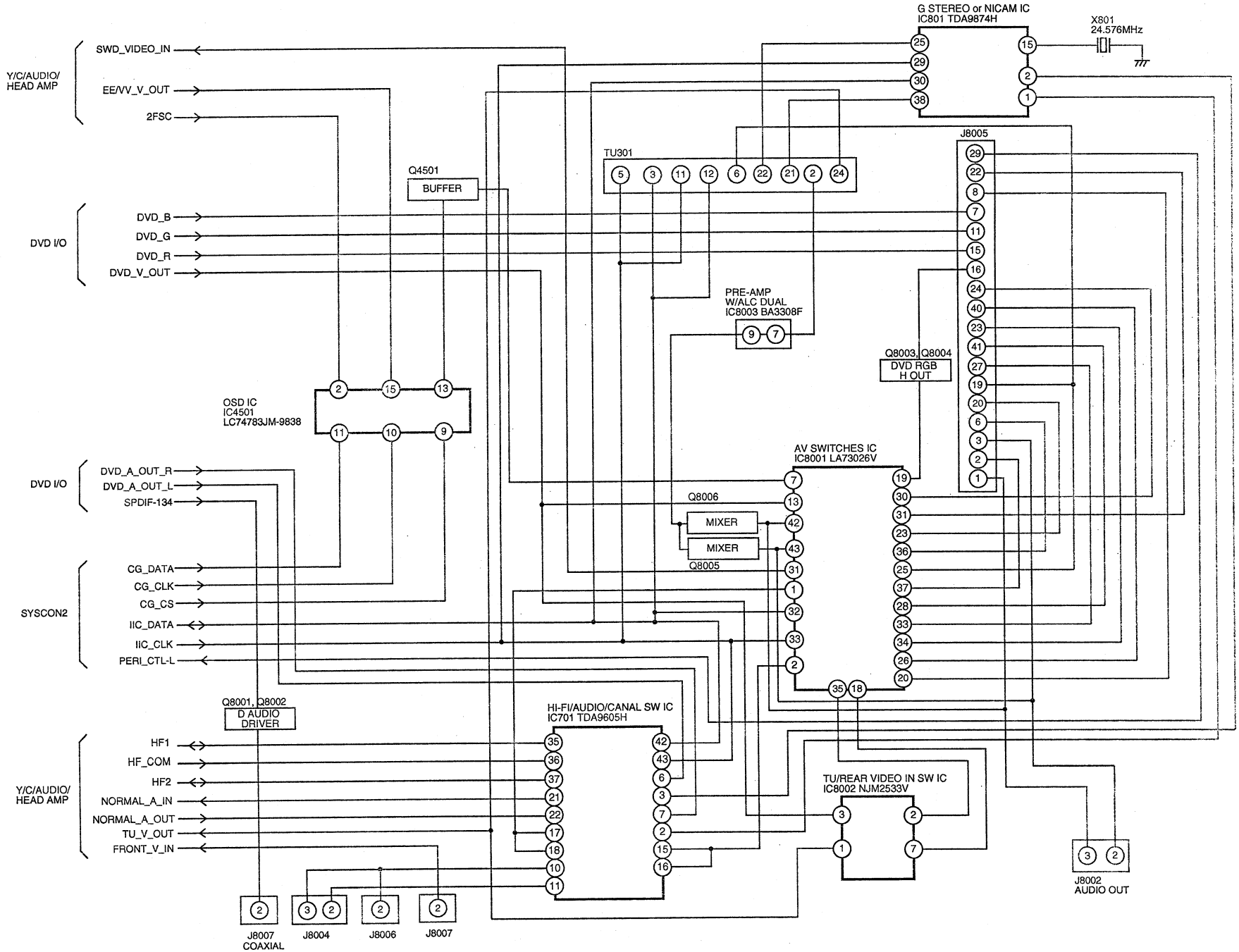

DVD IN/OUT BLOCK DIAGRAM

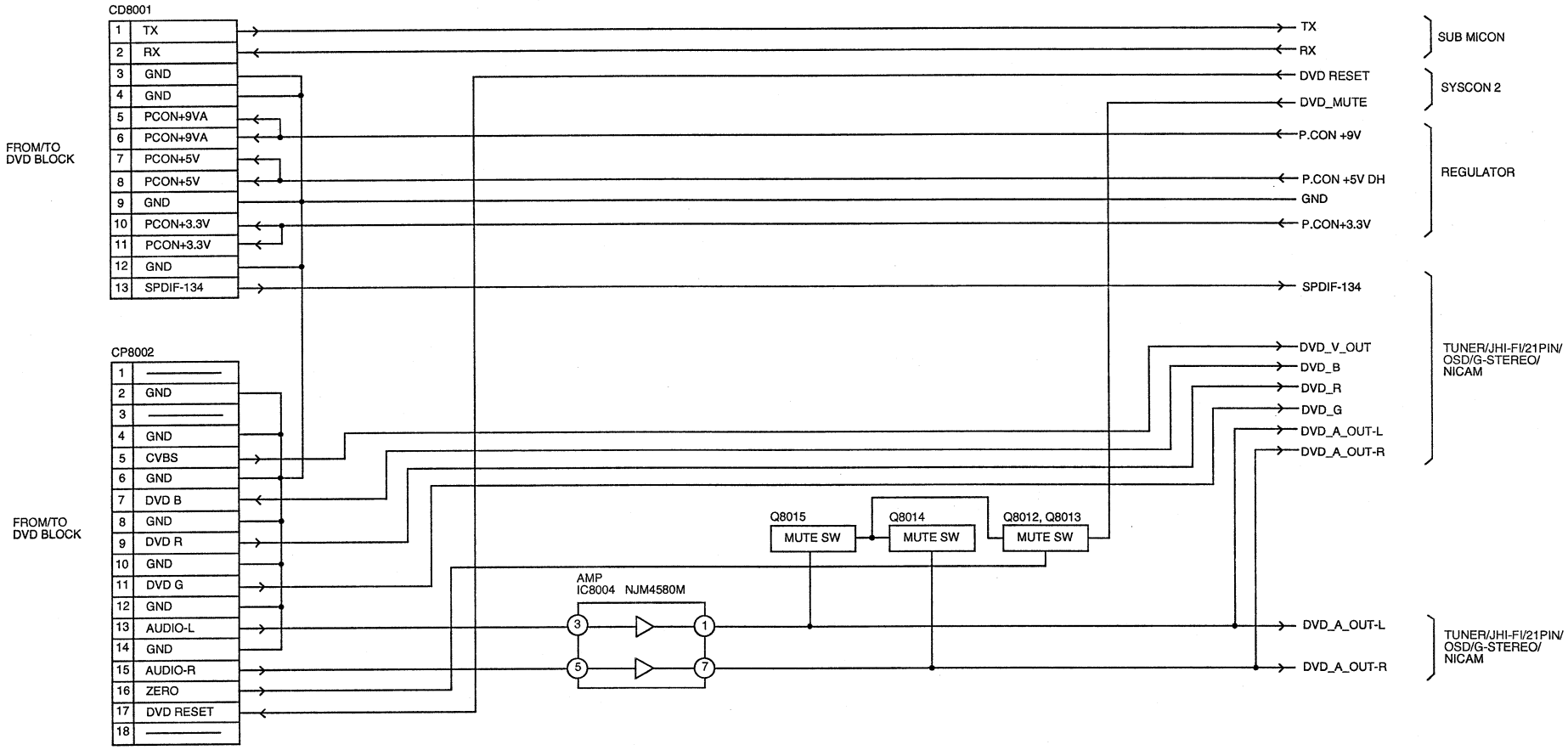

POWER BLOCK DIAGRAM

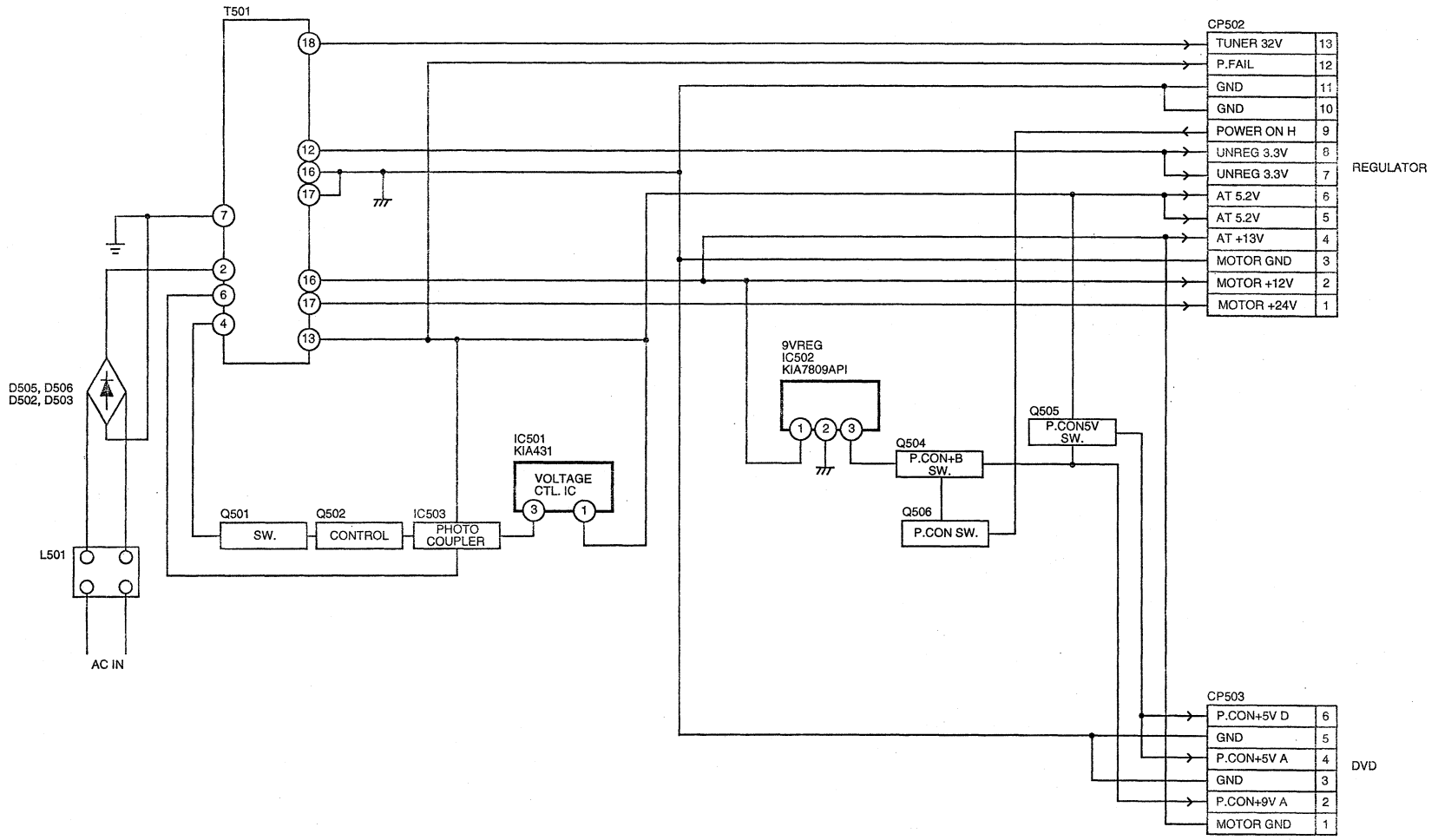

SUB MICON BLOCK DIAGRAM

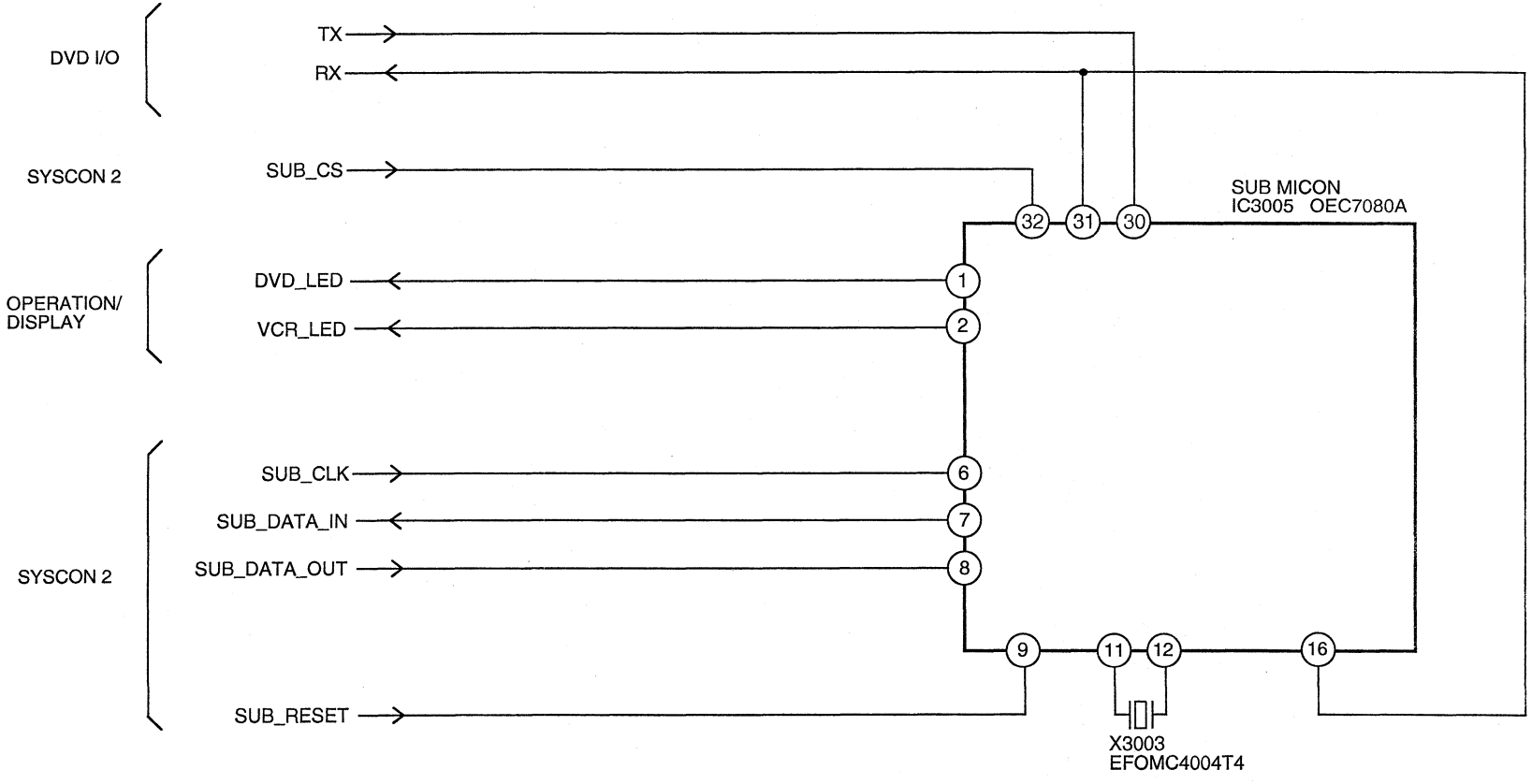

PRINTED CIRCUIT BOARDS

DVD (TOP SIDE)

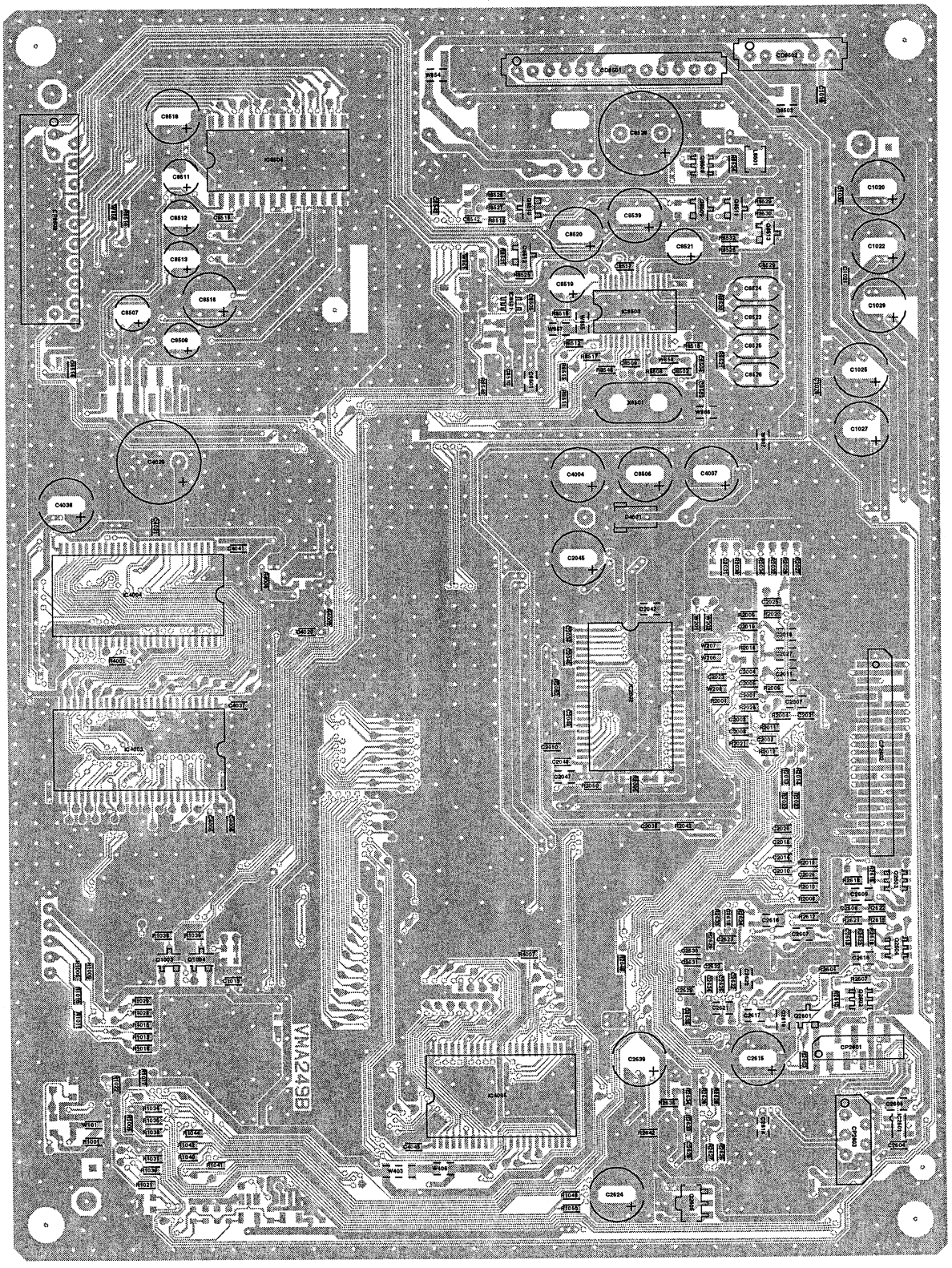

PRINTED CIRCUIT BOARDS
VCR (INSERTED PARTS)
SOLDER SIDE

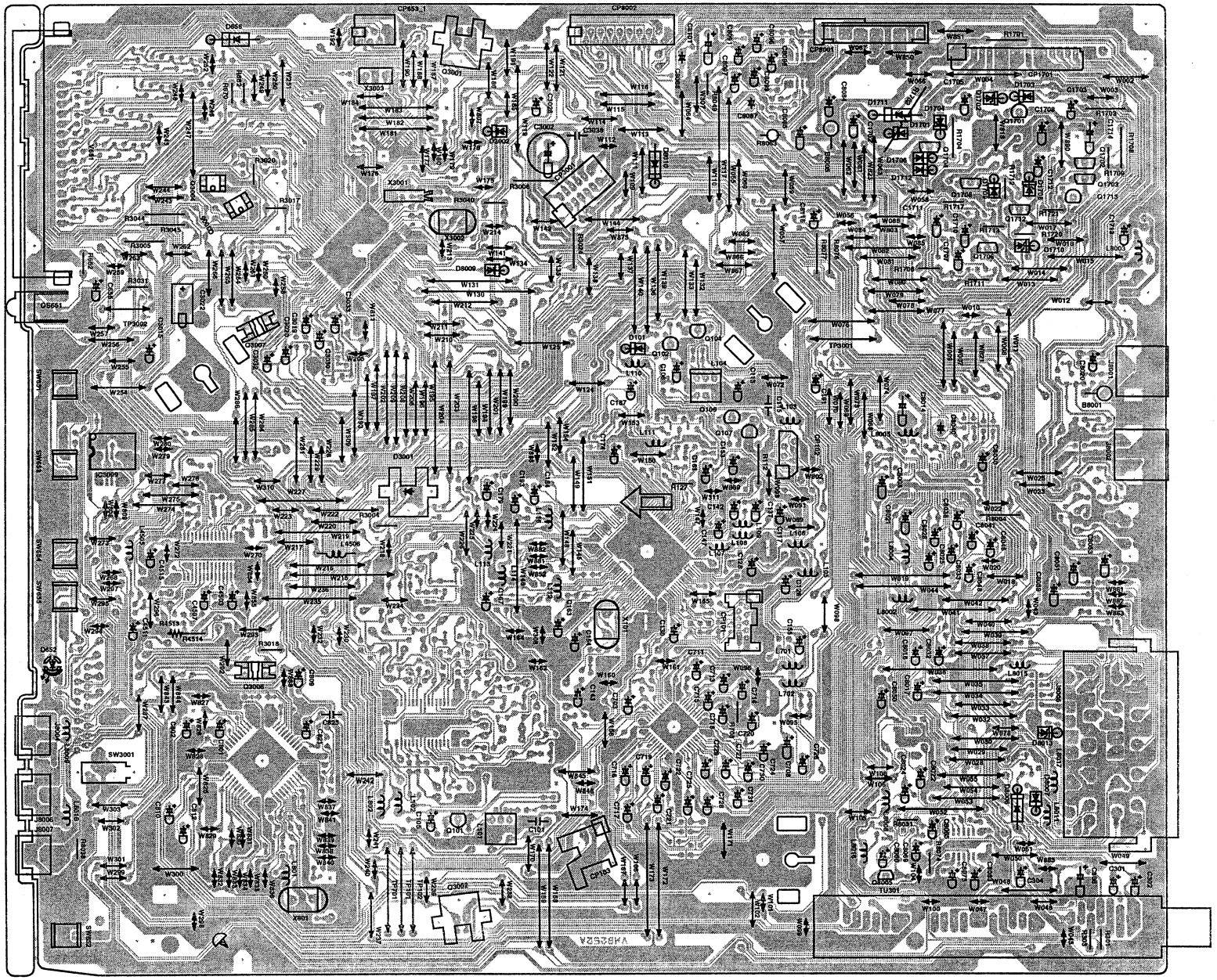

PRINTED CIRCUIT BOARDS

DVD (BOTTOM SIDE)

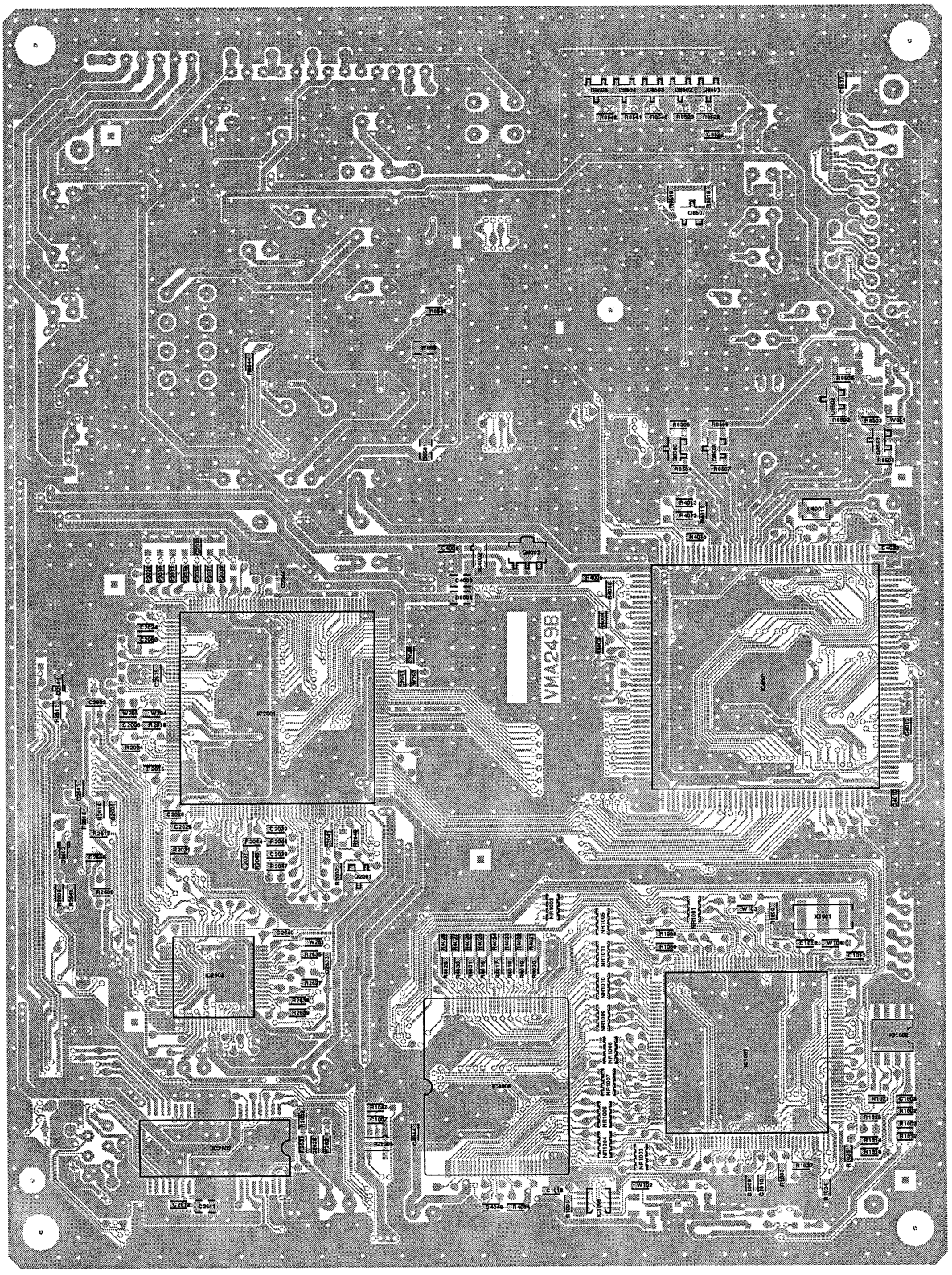

PRINTED CIRCUIT BOARDS
VCR (CHIP MOUNTED PARTS)
SOLDER SIDE

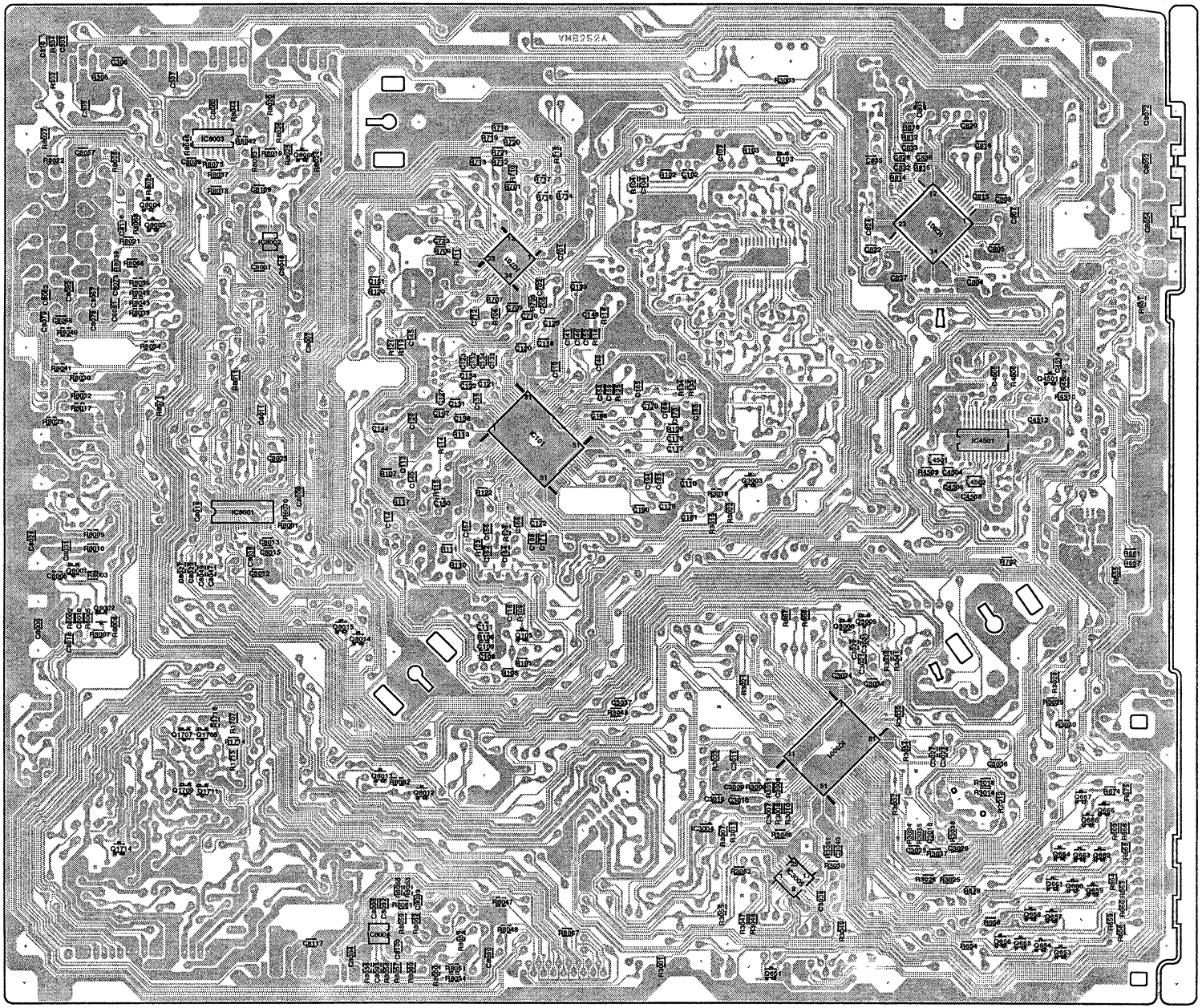

PRINTED CIRCUIT BOARDS
POWER/OPERATION
SOLDER SIDE

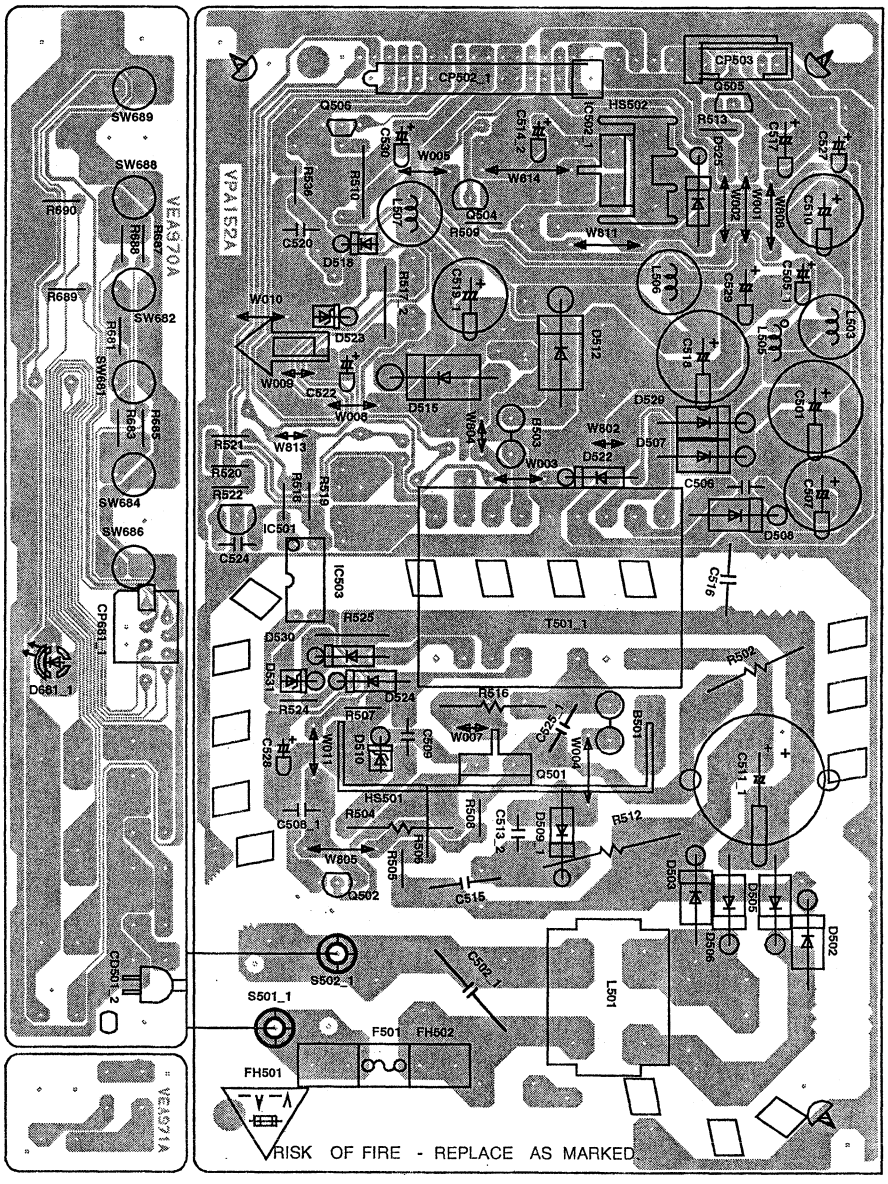

READ CHANNEL SCHEMATIC DIAGRAM (DVD MT PCB)

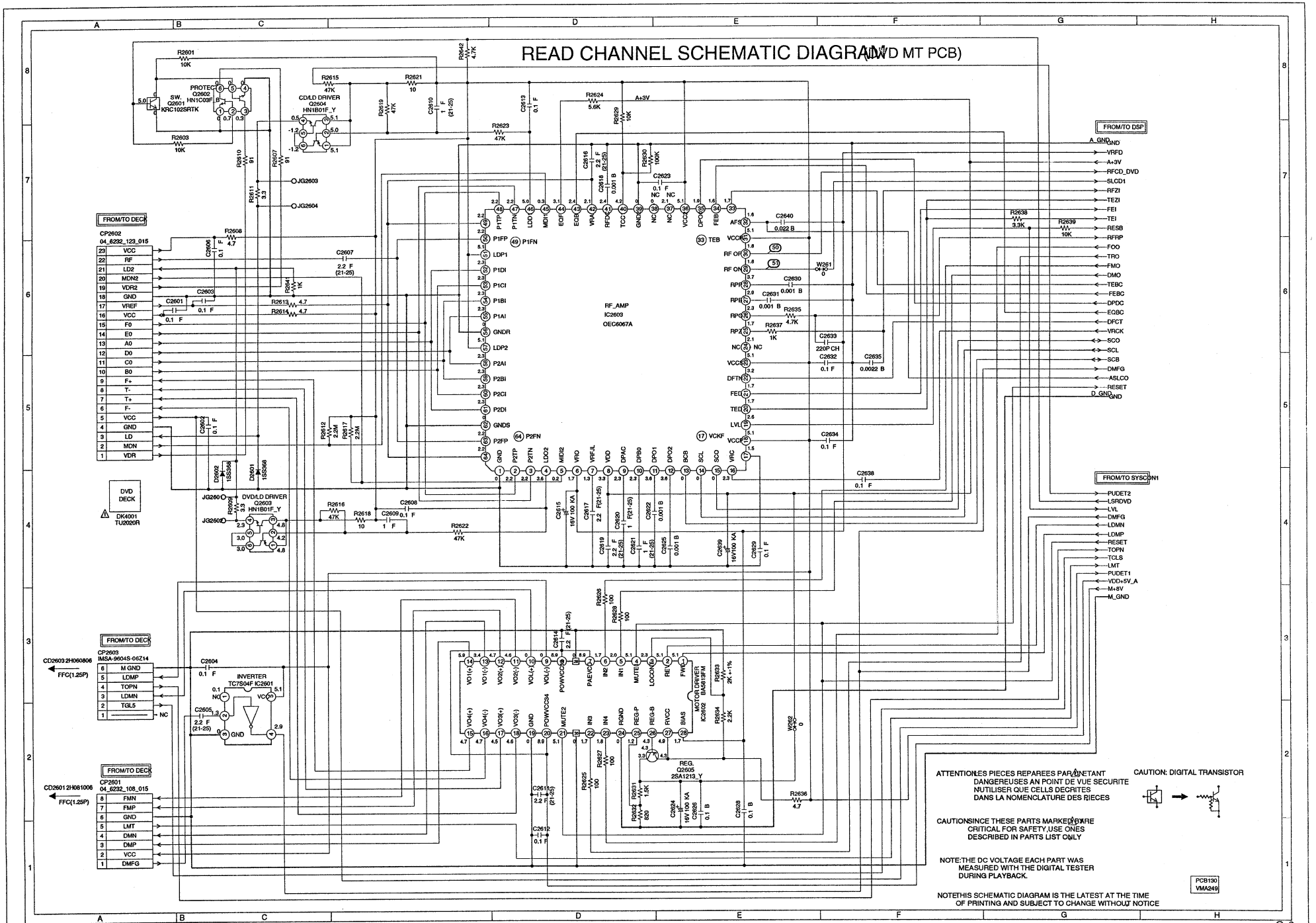

DSP SCHEMATIC DIAGRAM

(DVD MT PCB)

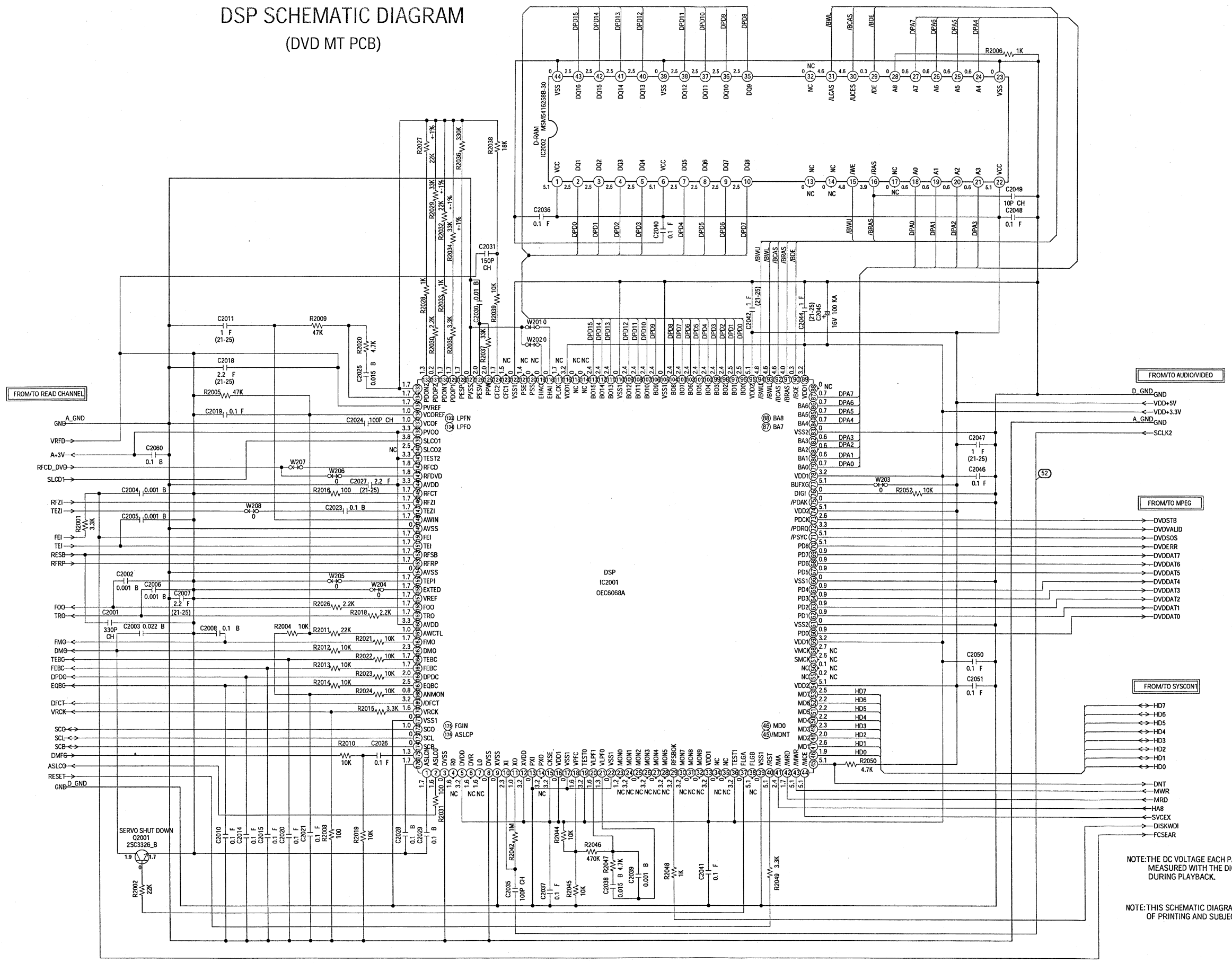

NOTE:THE DC VOLTAGE EACH PART WAS MEASURED WITH THE DIGITAL TESTER DURING PLAYBACK.

NOTE:THIS SCHEMATIC DIAGRAM IS THE LATEST AT THE TIME OF PRINTING AND SUBJECT TO CHANGE WITHOUT NOTICE.

MPEG SCHEMATIC DIAGRAM (DVD MT PCB)

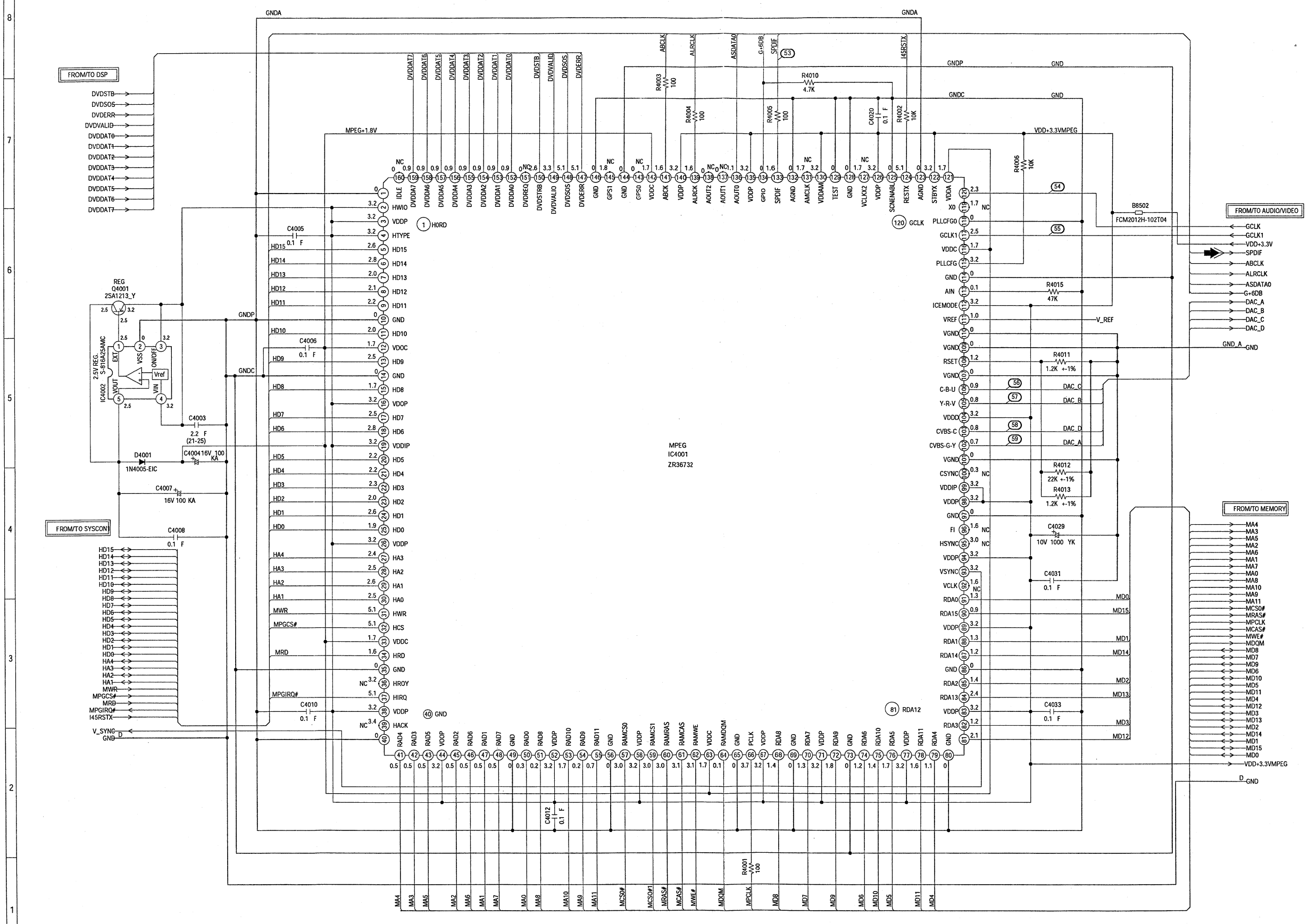

NOTE:THE DC VOLTAGE EACH PART WAS MEASURED WITH THE DIGITAL TESTER DURING PLAYBACK.

NOTE:THIS SCHEMATIC DIAGRAM IS THE LATEST AT THE TIME OF PRINTING AND SUBJECT TO CHANGE WITHOUT NOTICE。

DIGITAL AUDIO SIGNAL(PB)

MEMORY SCHEMATIC DIAGRAM

(DVD MT PCB)

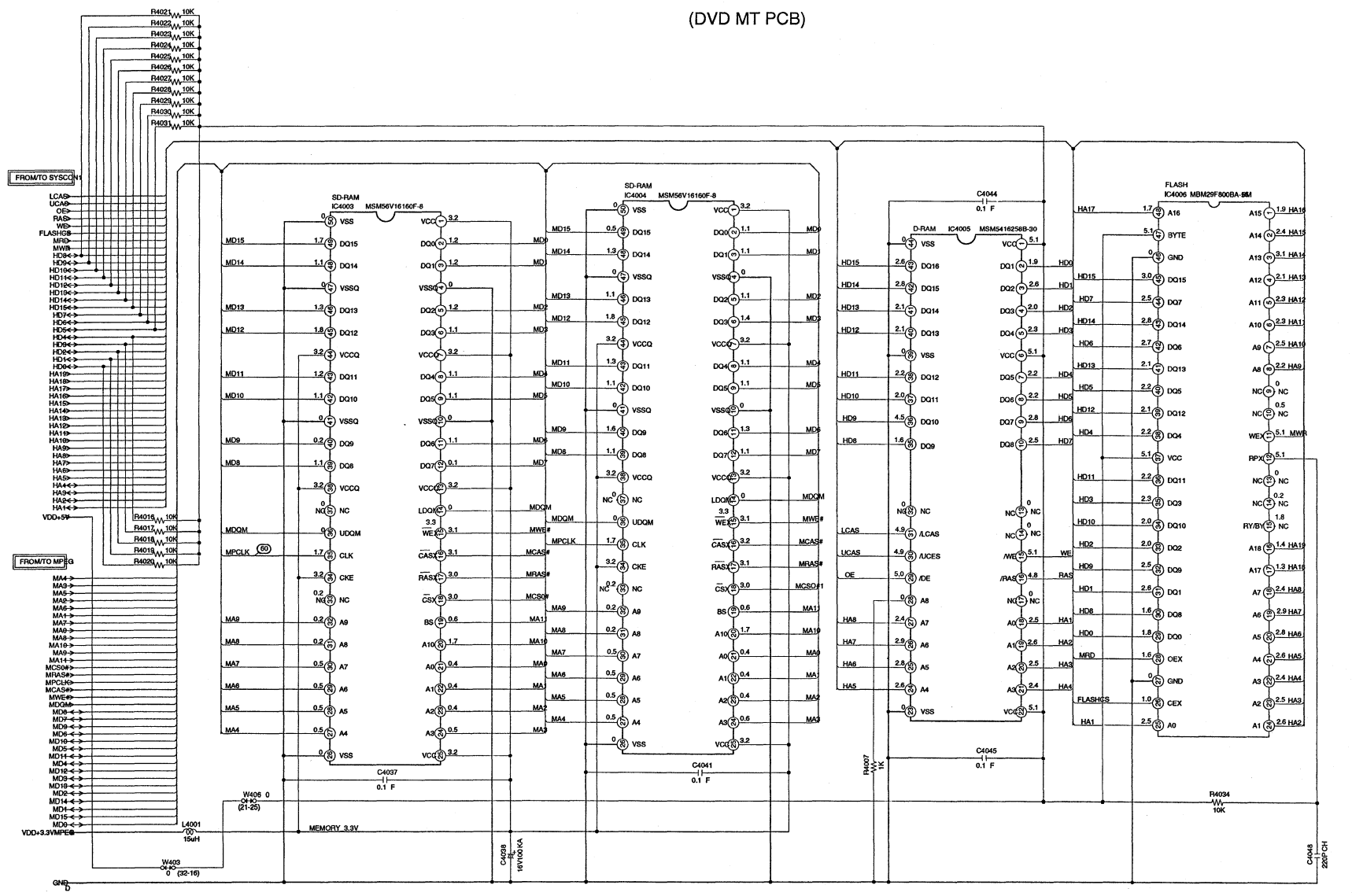

NOTE:THIS SCHEMATIC DIAGRAM IS THE LATEST AT THE TIME OF PRINTING AND SUBJECT TO CHANGE WITHOUT NOTICE

NOTE:THE DC VOLTAGE EACH PART WAS MEASURED WITH THE DIGITAL TESTER DURING PLAYBACK.

PCB130
VMA249

AUDIO/VIDEO SCHEMATIC DIAGRAM (DVD MT PCB)

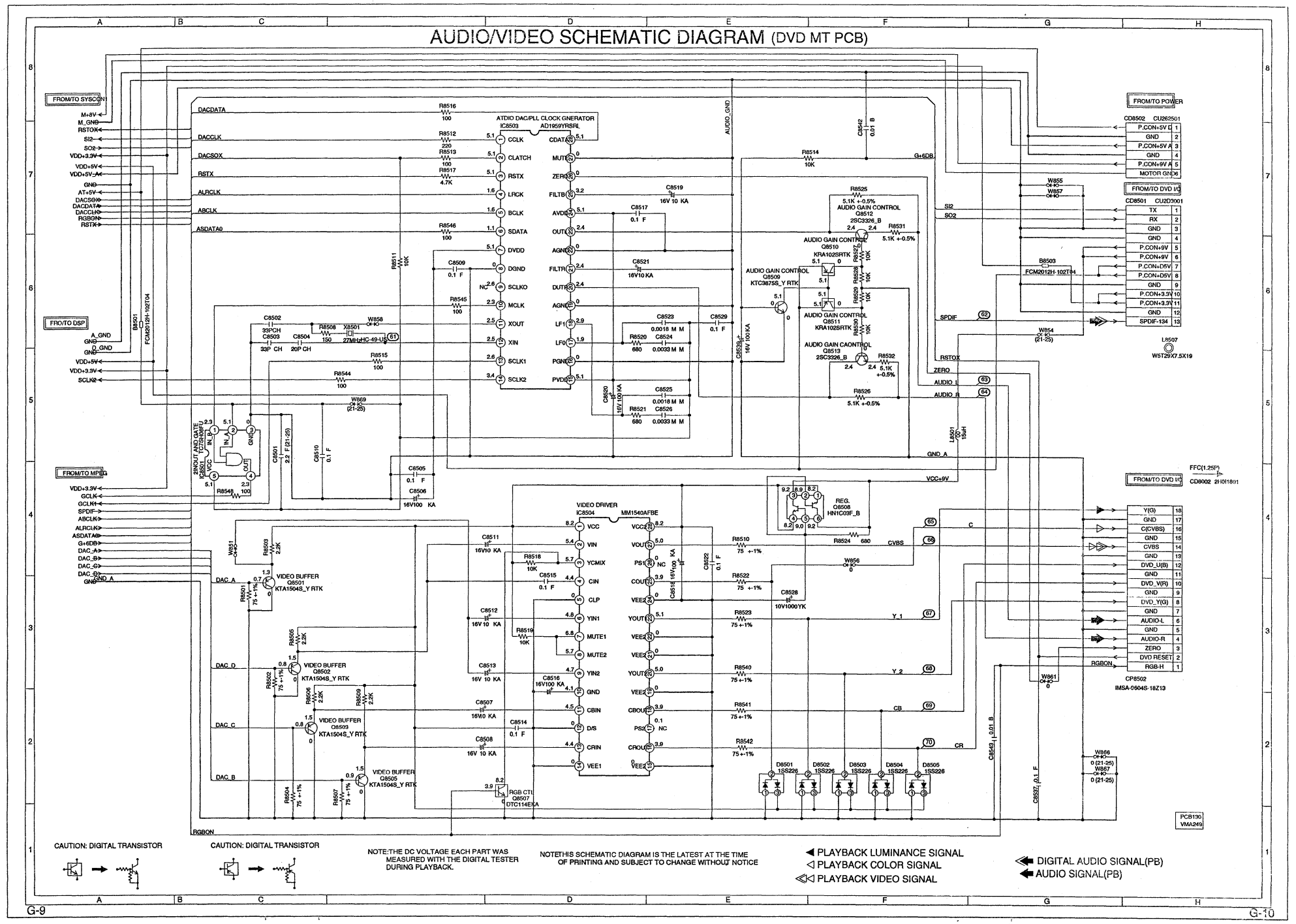

CAUTION: DIGITAL TRANSISTOR

CAUTION: DIGITAL TRANSISTOR

NOTE:THE DC VOLTAGE EACH PART WAS MEASURED WITH THE DIGITAL TESTER DURING PLAYBACK.

NOTETHIS SCHEMATIC DIAGRAM IS THE LATEST AT THE TIME OF PRINTING AND SUBJECT TO CHANGE WITHOUT NOTICE

◀ PLAYBACK LUMINANCE SIGNAL
◁ PLAYBACK COLOR SIGNAL
◁◁ PLAYBACK VIDEO SIGNAL

◀◀ DIGITAL AUDIO SIGNAL(PB)
◀ AUDIO SIGNAL(PB)

SYSCON1 SCHEMATIC DIAGRAM

(DVD MT PCB)

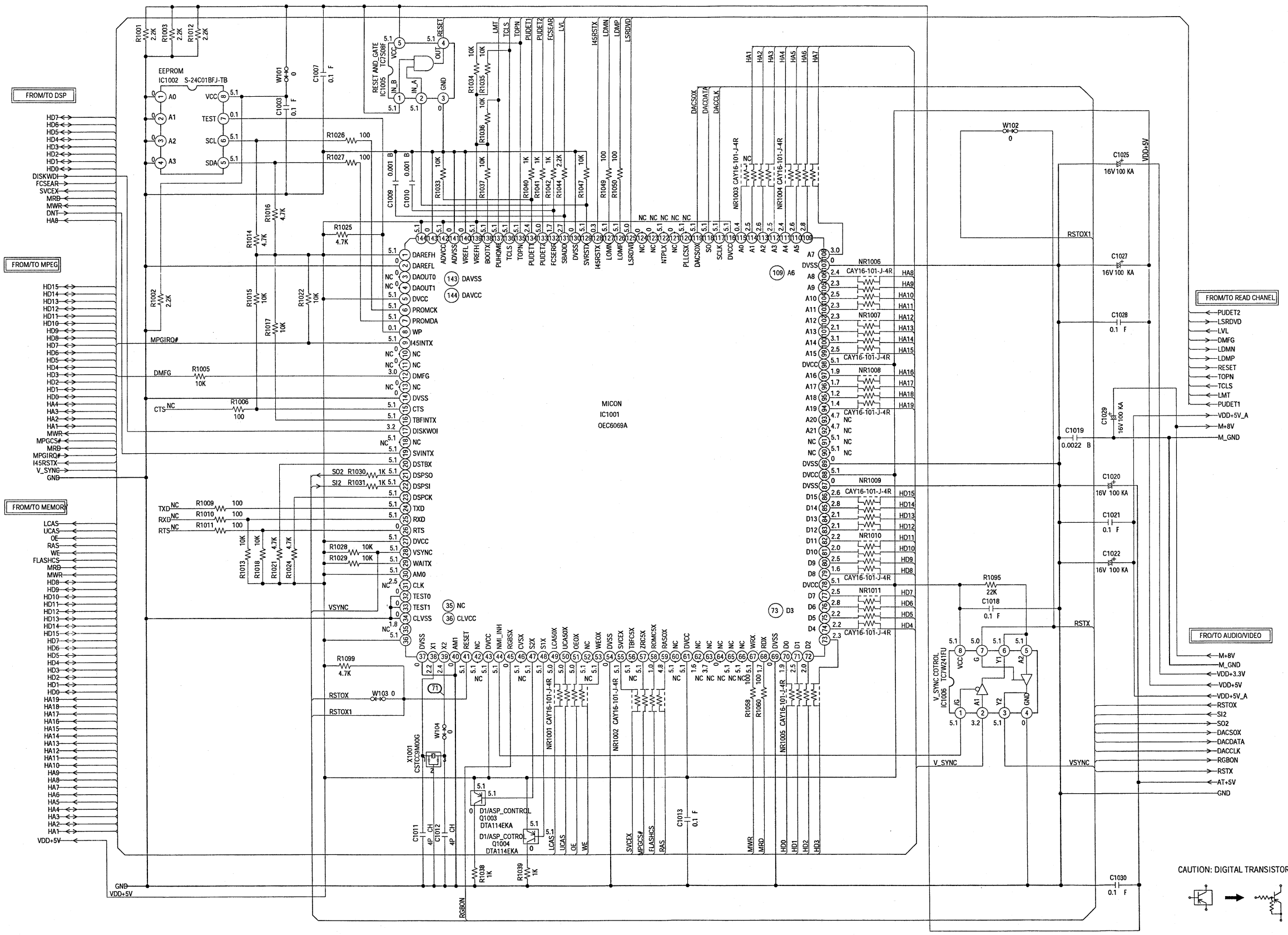

NOTE:THE DC VOLTAGE EACH PART WAS MEASURED WITH THE DIGITAL TESTER DURING PLAYBACK.

NOTE:THIS SCHEMATIC DIAGRAM IS THE LATEST AT THE TIME OF PRINTING AND SUBJECT TO CHANGE WITHOUT NOTICE。

Y/C/AUDIO/H.AMP
SCHEMATIC DIAGRAM
(VCR MT PCB)

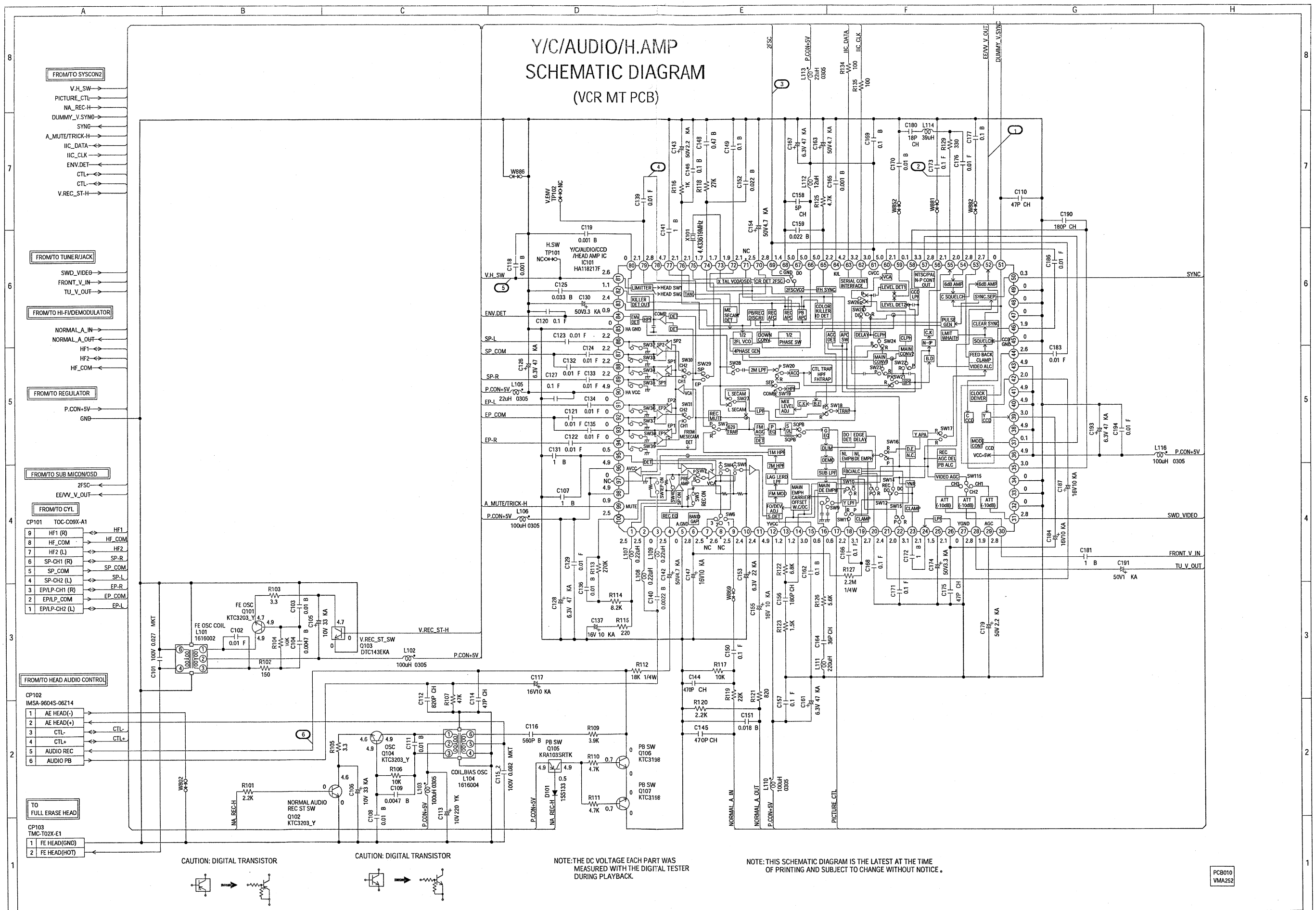

NOTE:THE DC VOLTAGE EACH PART WAS MEASURED WITH THE DIGITAL TESTER DURING PLAYBACK.

NOTE: THIS SCHEMATIC DIAGRAM IS THE LATEST AT THE TIME OF PRINTING AND SUBJECT TO CHANGE WITHOUT NOTICE.

PCB010
VMA252

MICON SCHEMATIC DIAGRAM

(VCR MT PCB)

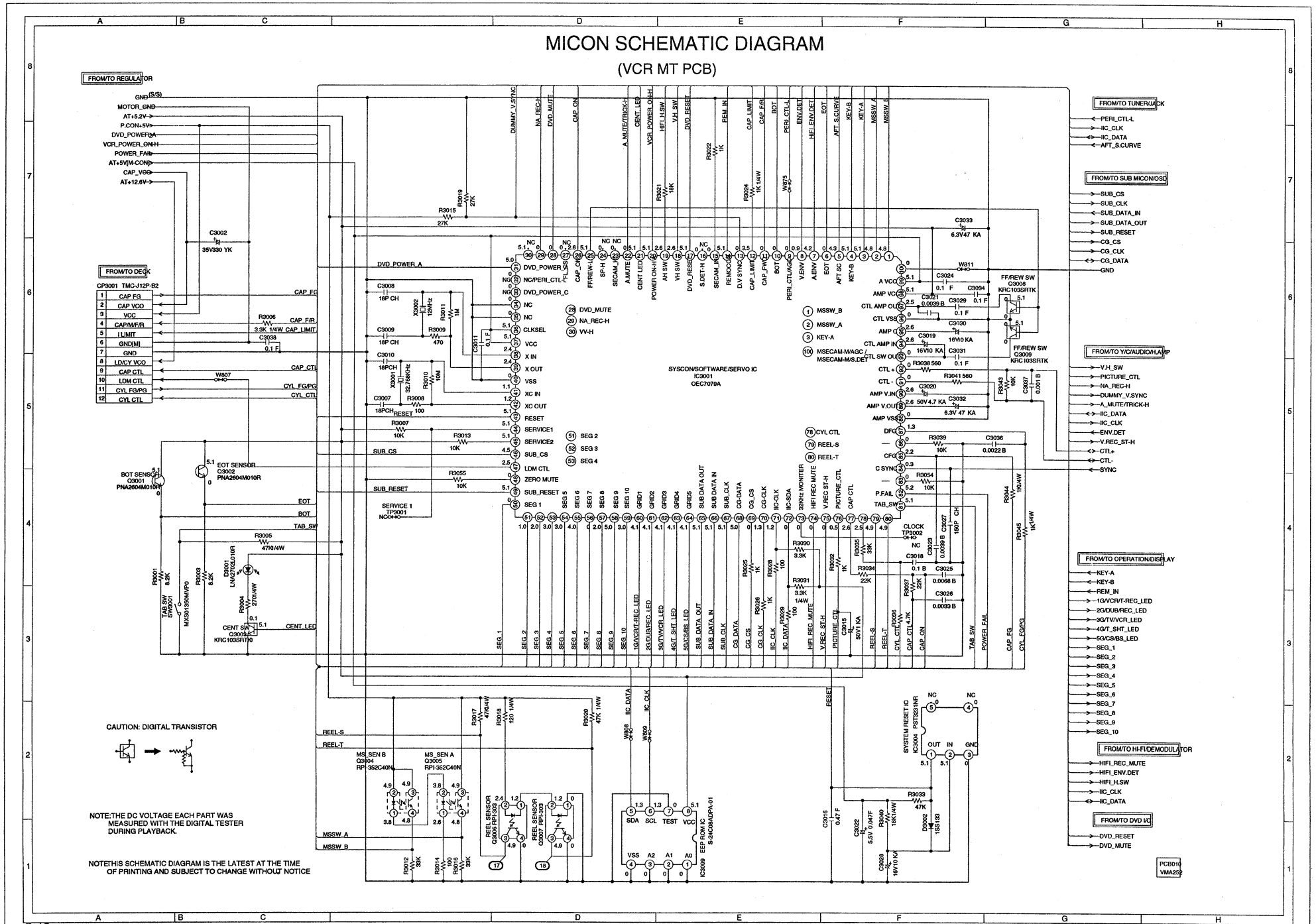

TUNER/JACK SCHEMATIC DIAGRAM (VCR MT PCB)

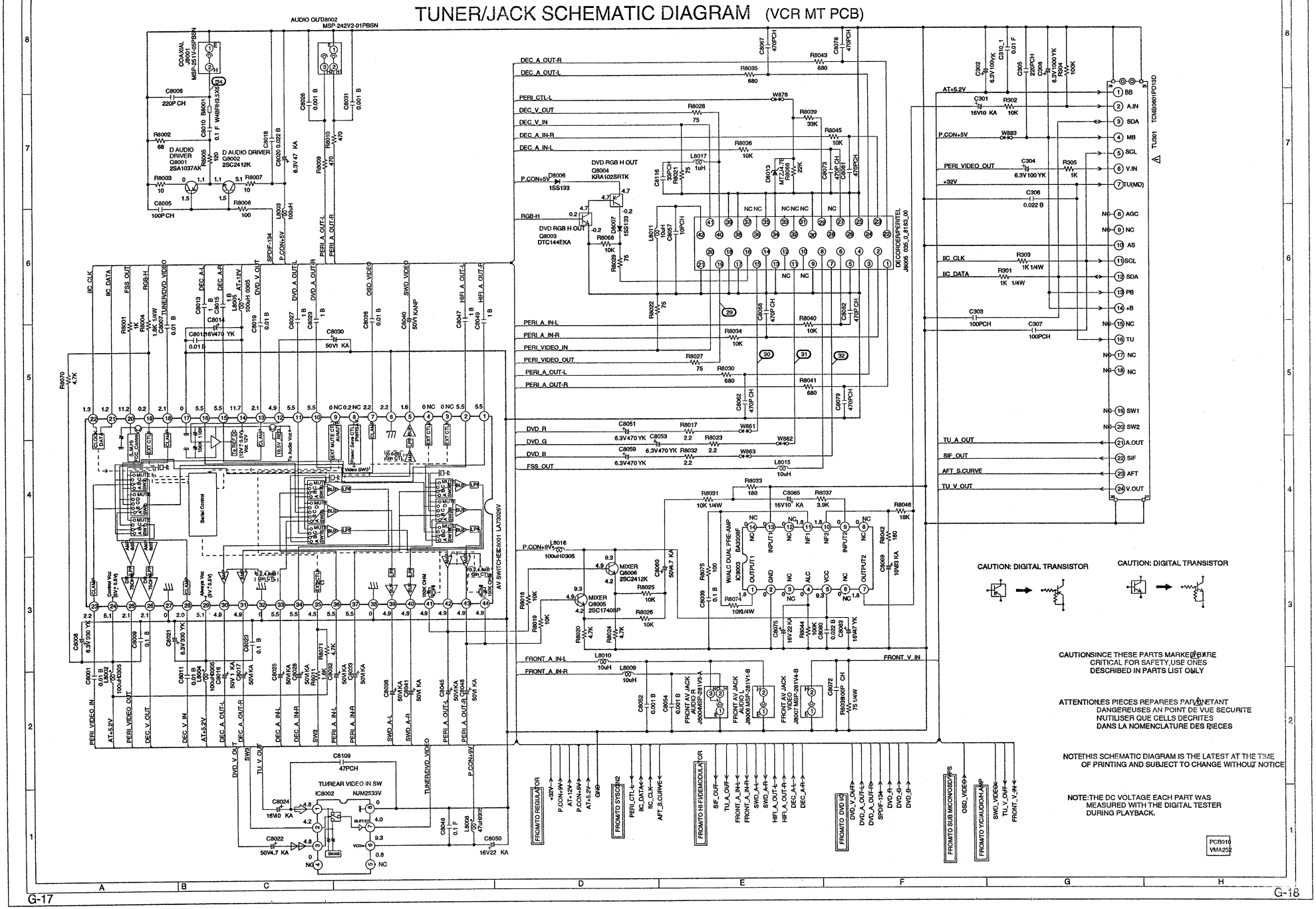

CAUTIONSINCE THESE PARTS MARKED ⚠ ARE CRITICAL FOR SAFETY,USE ONES DESCRIBED IN PARTS LIST ONLY

ATTENTIONLES PIECES REPAREES PARMI ⚠ ETANT DANGEREUSES AN POINT DE VUE SECURITE NUTILISER QUE CELLS DECRITES DANS LA NOMENCLATURE DES PIECES

NOTETHIS SCHEMATIC DIAGRAM IS THE LATEST AT THE TIME OF PRINTING AND SUBJECT TO CHANGE WITHOUT NOTICE

NOTE:THE DC VOLTAGE EACH PART WAS MEASURED WITH THE DIGITAL TESTER DURING PLAYBACK.

REGULATOR SCHEMATIC DIAGRAM

(VCR MT PCB)

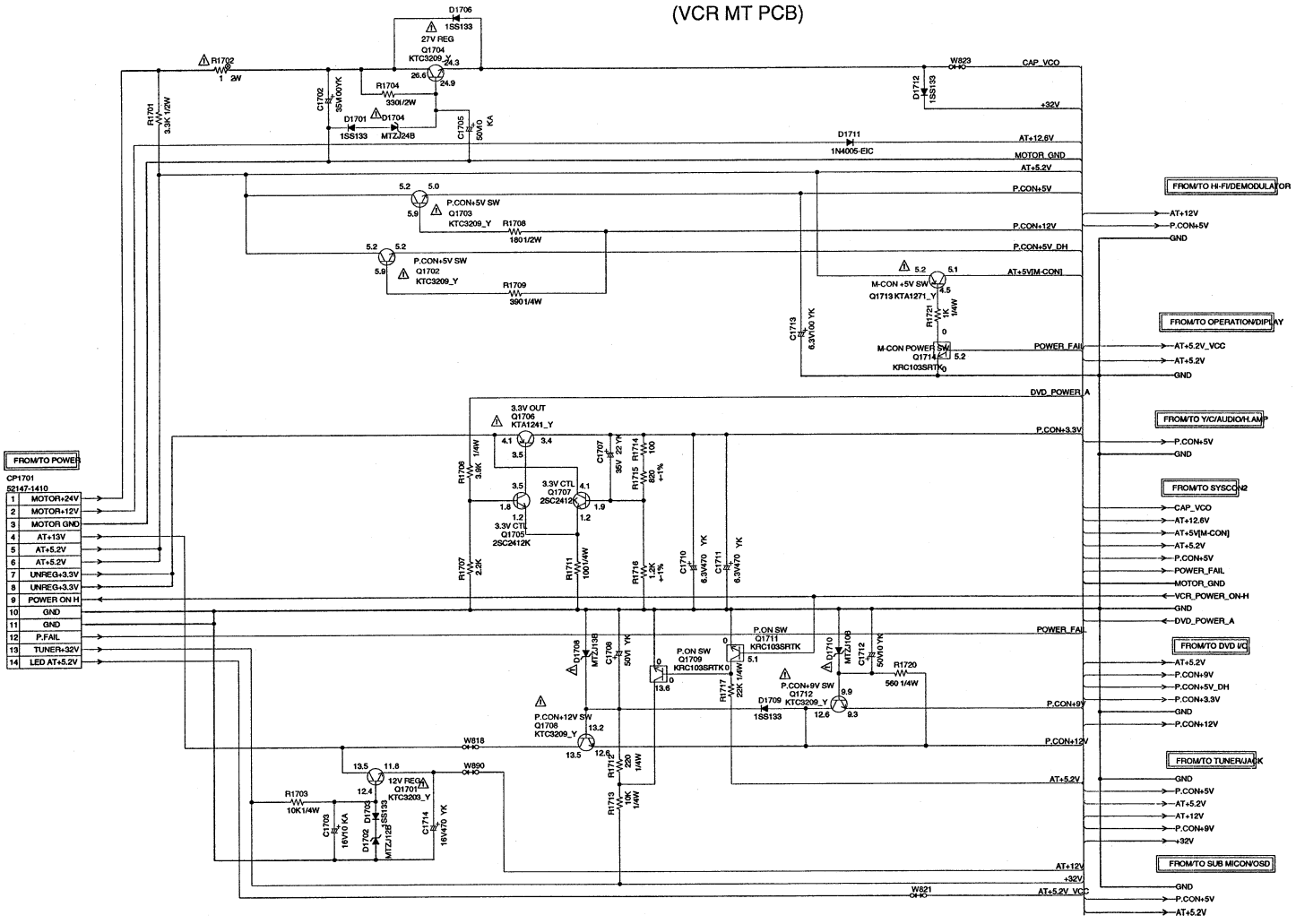

NOTE:THE DC VOLTAGE EACH PART WAS MEASURED WITH THE DIGITAL TESTER DURING PLAYBACK.

NOTE:THIS SCHEMATIC DIAGRAM IS THE LATEST AT THE TIME OF PRINTING AND SUBJECT TO CHANGE WITHOUT NOTICE

ATTENTION:LES PIECES REPAREES PARMI CETANT DANGEREUSES AN POINT DE VUE SECURITE N'UTILISER QUE CELLS DECRITES DANS LA NOMENCLATURE DES PIECES

CAUTION:SINCE THESE PARTS MARKED ⚠ ARE CRITICAL FOR SAFETY,USE ONES DESCRIBED IN PARTS LIST ONLY

CAUTION: DIGITAL TRANSISTOR

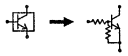

PCB010
VMA252

DISPLAY SCHEMATIC DIAGRAM

(VCR MT PCB)

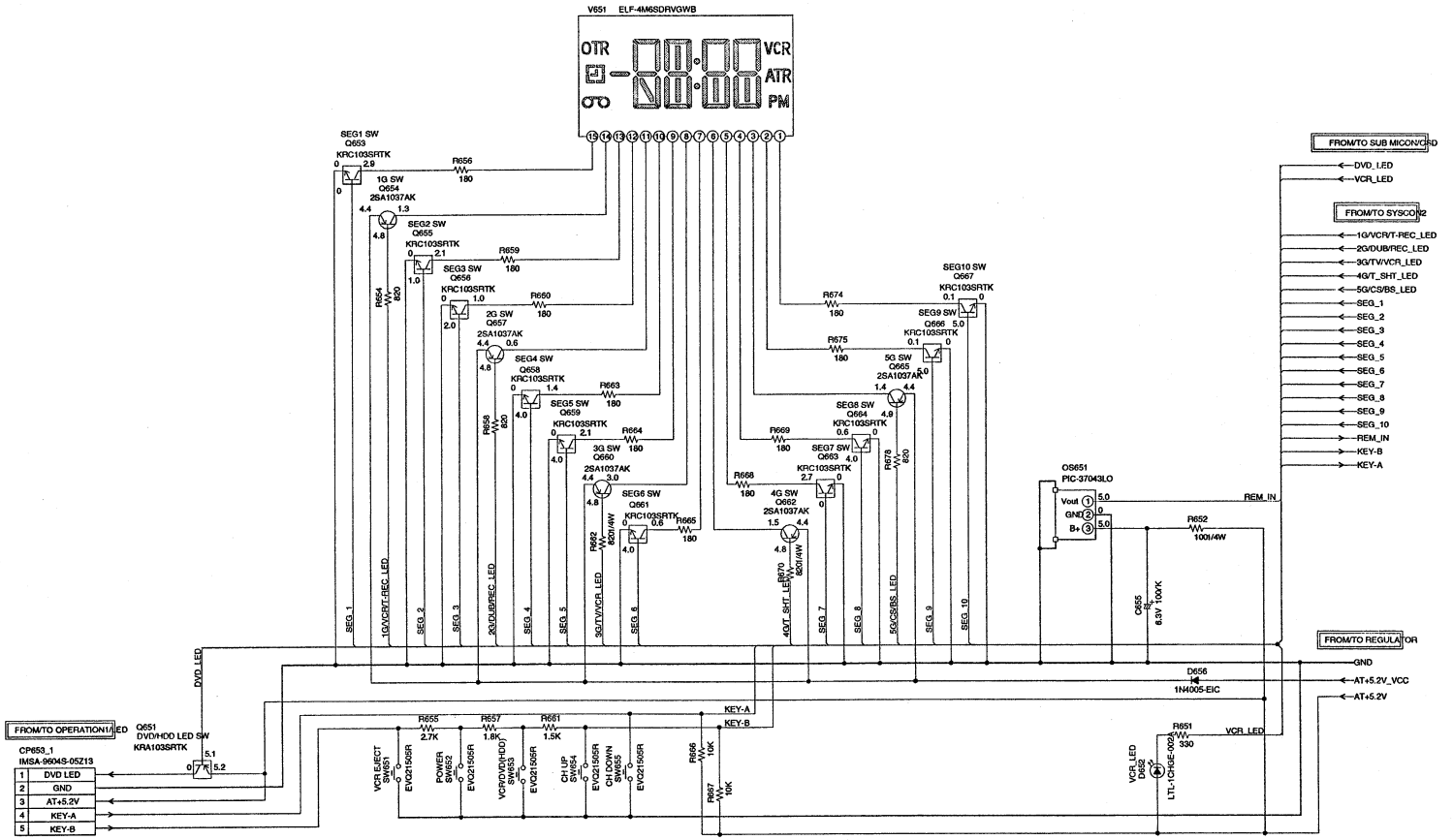

CAUTION: DIGITAL TRANSISTOR

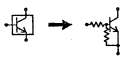

CAUTION: DIGITAL TRANSISTOR

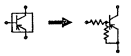

NOTE:THE DC VOLTAGE EACH PART WAS MEASURED WITH THE DIGITAL TESTER DURING PLAYBACK.

NOTETHIS SCHEMATIC DIAGRAM IS THE LATEST AT THE TIME OF PRINTING AND SUBJECT TO CHANGE WITHOUT NOTICE

PCB010
VMA252

HI-FI/DEMODULATOR SCHEMATIC DIAGRAM

(VCR MT PCB)

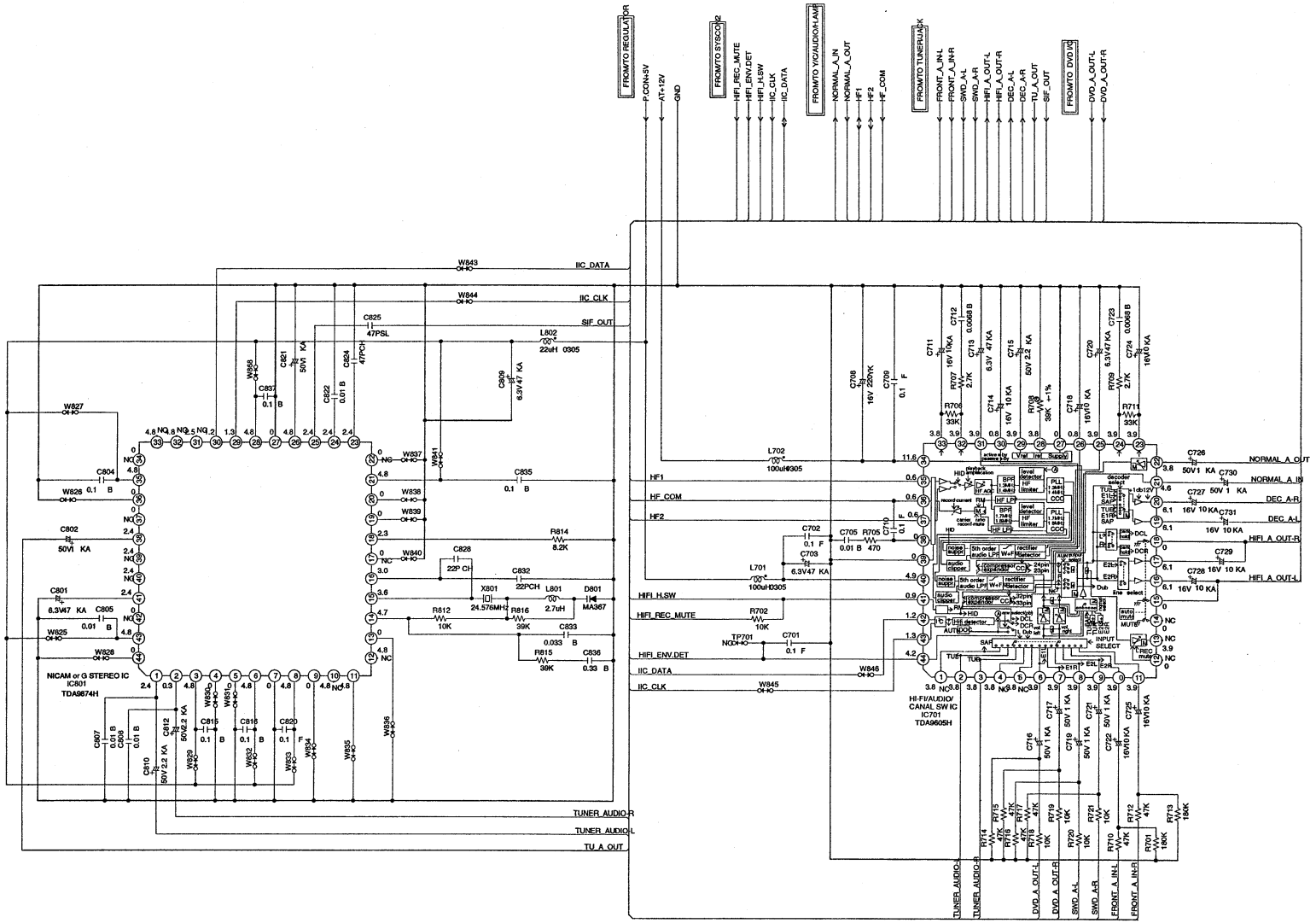

PIN	G STEREO TDA9873H	NICAM TDA9874H
1	OUTL	OUTL
2	OUTR	OUTR
3	CDE1	VDDA1
4	NC	VSSA1
5	NC	VSSD1
6	CDE2	VDDD1
7	AGND	VSSD2
8	AF1I	VDDD2
9	NC	TP2
10	AF1O	NICAM
11	NC	TP1
12	NC	PCLK
13	AFR	ADDR1
14	LF1	VTUNE
15	XTAL	XTALI
16	NC	XTALO
17	NC	TEST2
18	LF2	IREF
19	NC	ADDR2
20	NC	VSSA2
21	MAD	VDDA2
22	NC	TEST1
23	NC	SIF2
24	CAF1	VREF1
25	IFINT	SIF1
26	CAF2	CRESET
27	DGND	VSSD3
28	VCC	VDDD3
29	SCL	SCL
30	SDA	SDA
31	LPF	SDO
32	AF2O	WS
33	AF2I	SCK
34	CTRIG	SYSCLK
35	CID	VDDD4
36	NC	VSSD4
37	P1	P1
38	EXTM	MONO/IN
39	EXTR	EXTIR
40	EXTL	EXTIL
41	VREF	VREF2
42	P2	P2
43	OUTM	VDDA3
44	NC	VSSA3

NOTE:THE DC VOLTAGE EACH PART WAS MEASURED WITH THE DIGITAL TESTER DURING PLAYBACK.

NOTE:THIS SCHEMATIC DIAGRAM IS THE LATEST AT THE TIME OF PRINTING AND SUBJECT TO CHANGE WITHOUT NOTICE

PCB010
VMA252

DVD I/O SCHEMATIC DIAGRAM

(VCR MT PCB)

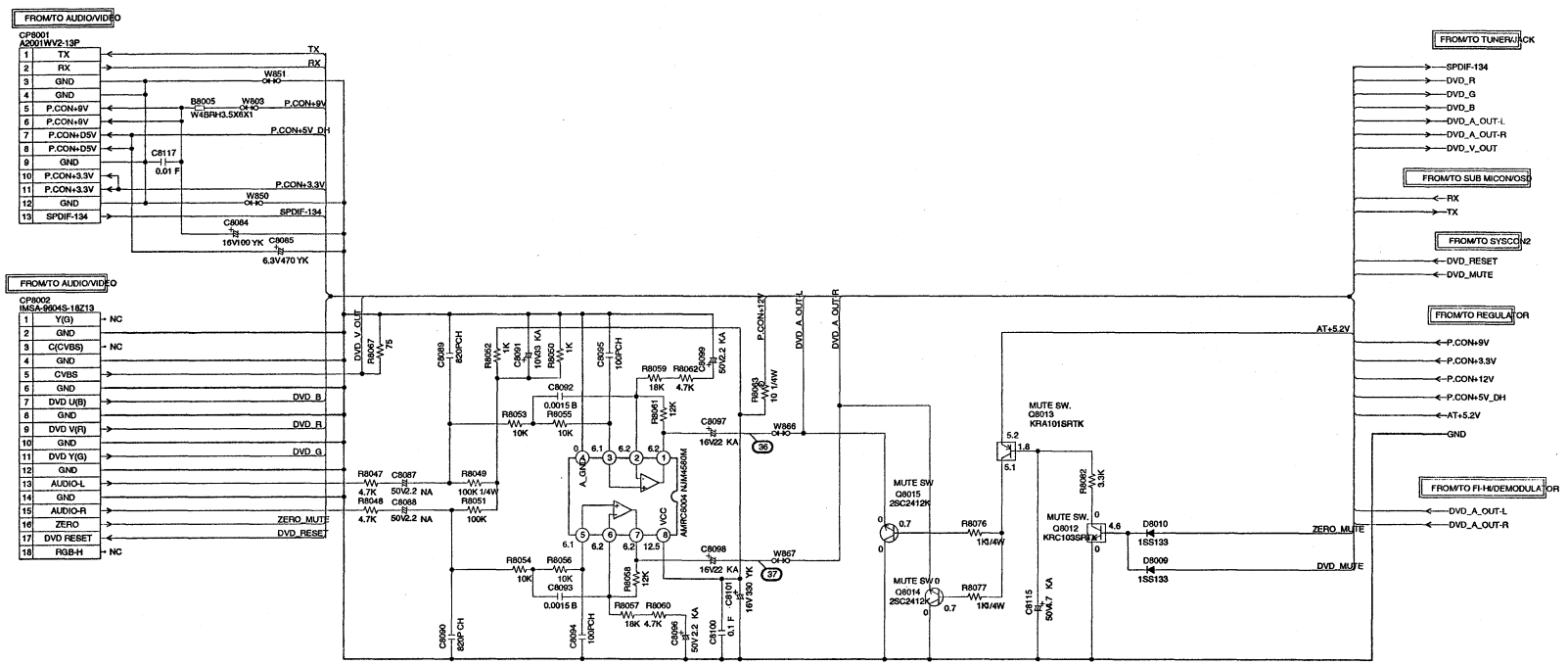

NOTE:THE DC VOLTAGE EACH PART WAS MEASURED WITH THE DIGITAL TESTER DURING PLAYBACK.

NOTE:THIS SCHEMATIC DIAGRAM IS THE LATEST AT THE TIME OF PRINTING AND SUBJECT TO CHANGE WITHOUT NOTICE

CAUTION: DIGITAL TRANSISTOR

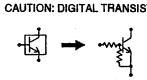

CAUTION: DIGITAL TRANSISTOR

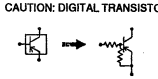

PCB010
VMA252

SUB MICON/OSD SCHEMATIC DIAGRAM

(VCR MT PCB)

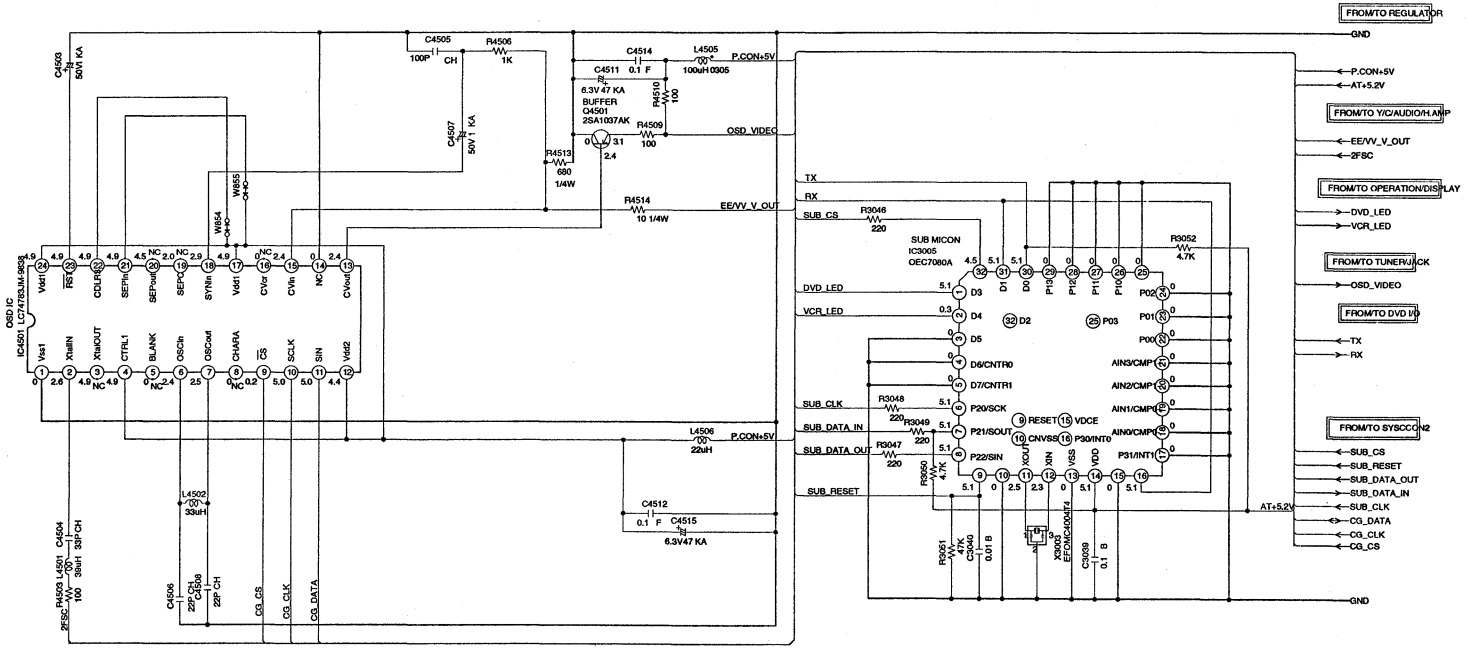

NOTE:THE DC VOLTAGE EACH PART WAS MEASURED WITH THE DIGITAL TESTER DURING PLAYBACK.

NOTETHIS SCHEMATIC DIAGRAM IS THE LATEST AT THE TIME OF PRINTING AND SUBJECT TO CHANGE WITHOUT NOTICE

PCB010
VMA252

POWER SCHEMATIC DIAGRAM

(POWER PCB)

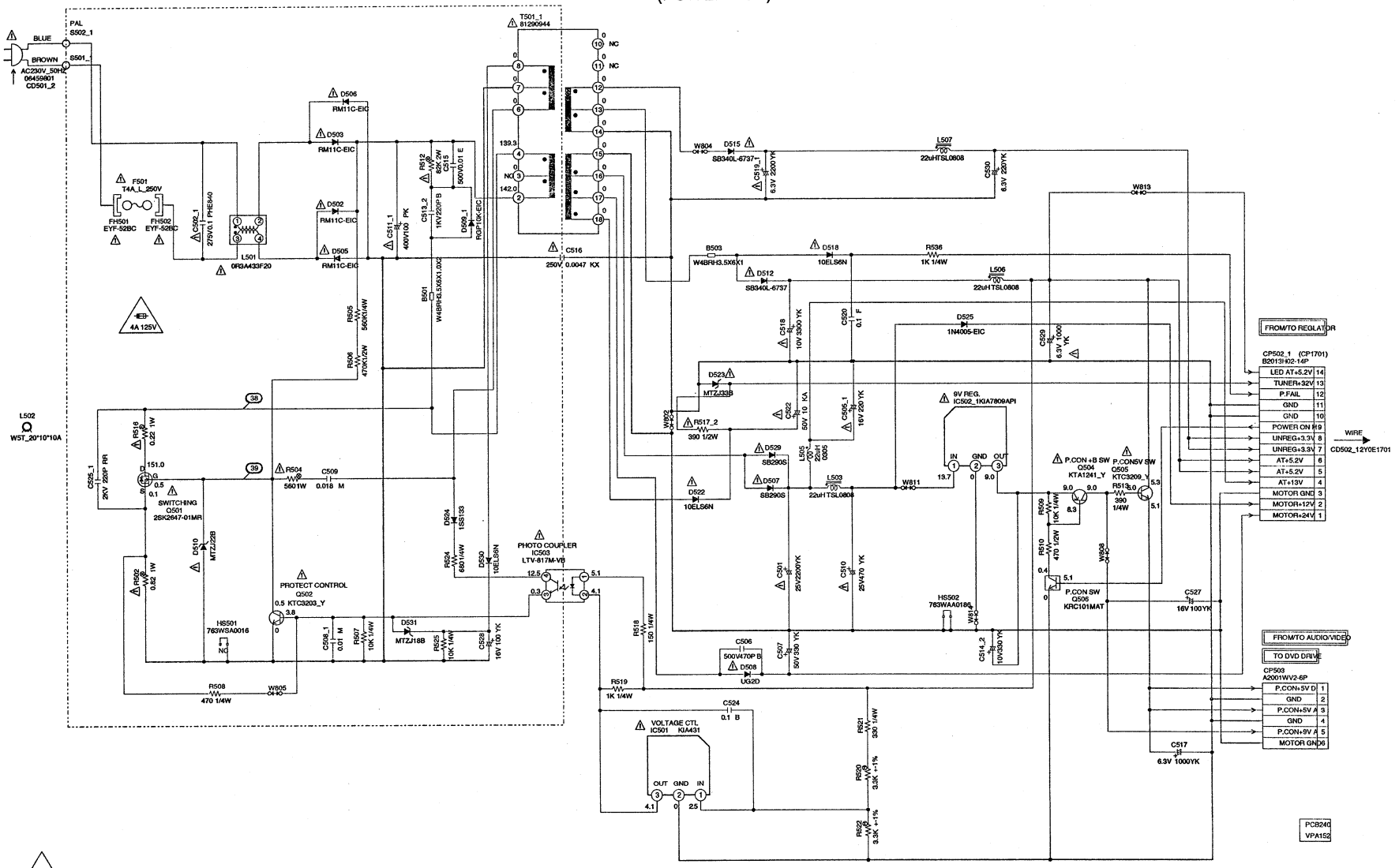

CAUTION:FOR CONTINUED PROTECTION AGAINST FIRE HAZARD, REPLACE ONLY WITH THE SAME TYPE 4A/125V(F501).

ATTENTION:POUR UNE PROTECTION CONTINUE LES FUSIBLES D NUTOLISER QUE DES FUSIBLE DE MEME 4A/125V(F501).

CAUTIONSINCE THESE PARTS MARKED ⚠ ARE CRITICAL FOR SAFETY,USE ONES DESCRIBED IN PARTS LIST ONLY

ATTENTIONLES PIECES REPAREES PARTANT ⚠ DANGEREUSES AN POINT DE VUE SECURITE NUTILISER QUE CELLS DECRITES DANS LA NOMENCLATURE DES PIECES

NOTETHIS SCHEMATIC DIAGRAM IS THE LATEST AT THE TIME OF PRINTING AND SUBJECT TO CHANGE WITHOUT NOTICE

NOTE:THE DC VOLTAGE EACH PART WAS MEASURED WITH THE DIGITAL TESTER DURING PLAYBACK.

CAUTION: DIGITAL TRANSISTOR

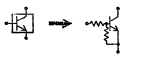

OPERATION SCHEMATIC DIAGRAM

(OPERATION PCB)

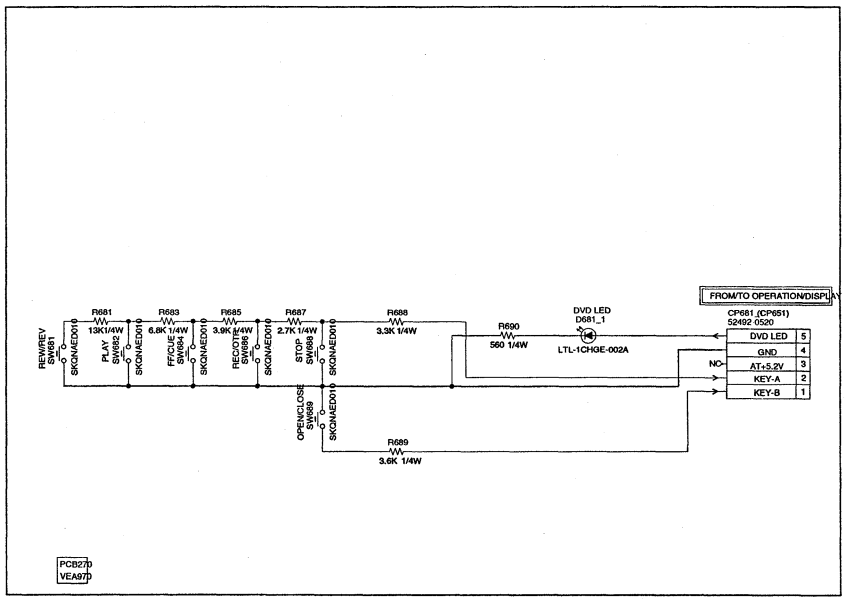

NOTE:THE DC VOLTAGE EACH PART WAS MEASURED WITH THE DIGITAL TESTER DURING PLAYBACK.

NOTETHIS SCHEMATIC DIAGRAM IS THE LATEST AT THE TIME OF PRINTING AND SUBJECT TO CHANGE WITHOUT NOTICE

INTERCONNECTION DIAGRAM

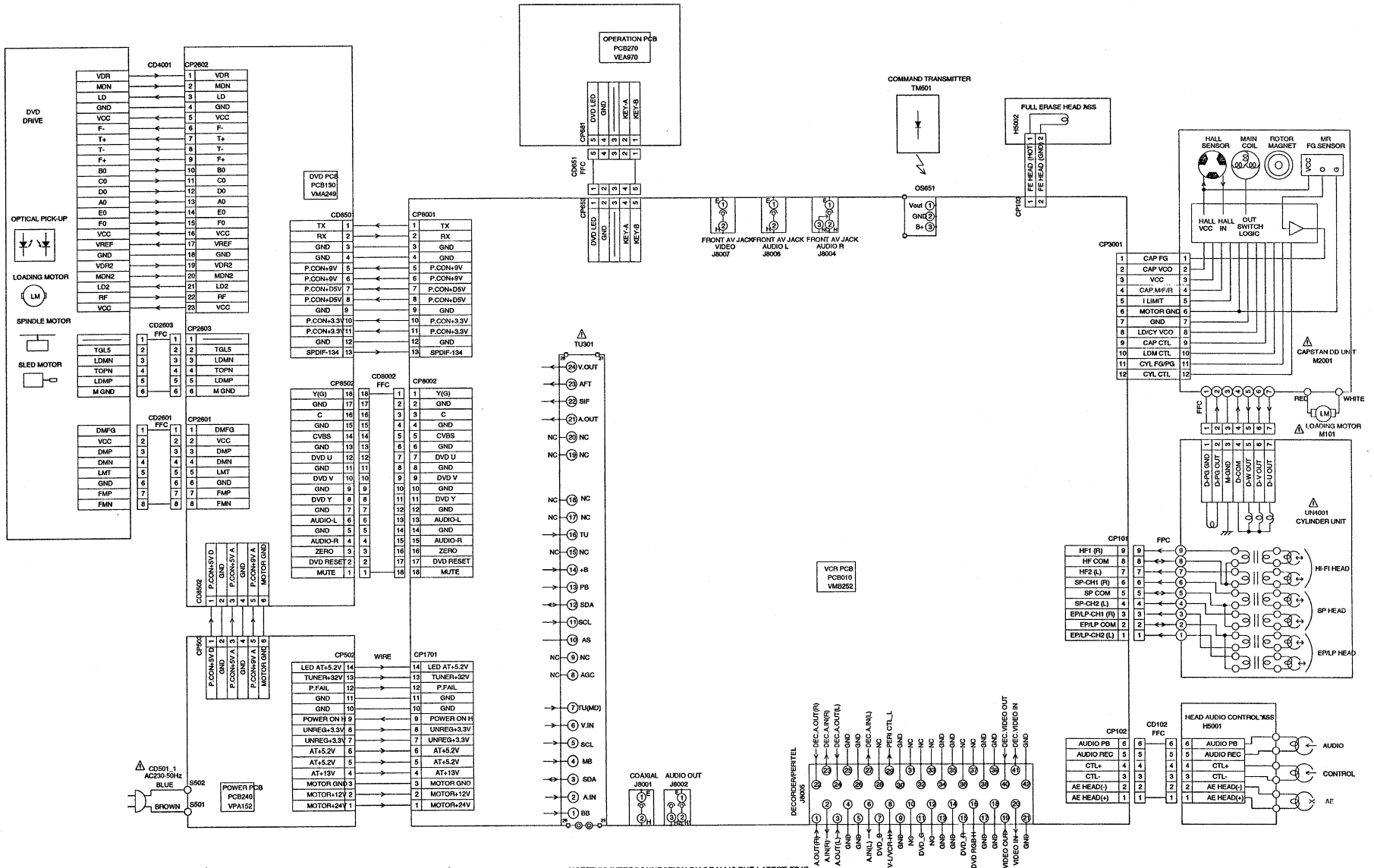

CAUTION:SINCE THESE PARTS MARKED ⚠ ARE CRITICAL FOR SAFETY,USE ONES DESCRIBED IN PARTS LIST ONLY

ATTENTION:LES PIECES REPAREES PAR ⚠ ETANT DANGEREUSES AN POINT DE VUE SECURITE N'UTILISER QUE CELLS DECRITES DANS LA NOMENCLATURE DES PIECES

NOTE:THIS INTERCONNECTION DIAGRAM IS THE LATEST ATIME OF PRINTING AND SUBJECT TO CHANGE WITHOUT NOTICE

WAVEFORMS

Y/C/AUDIO/HEAD AMP

REC
10μs
0.5V

①

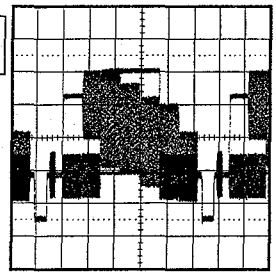

REC
5μs
10V

⑥

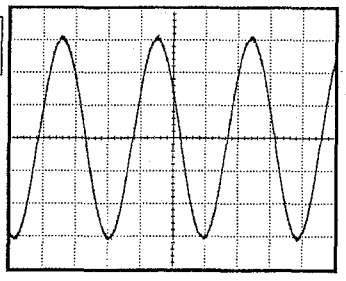

10μs
500mV

㉛

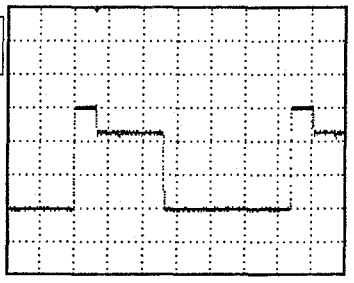

PB
10μs
200mV

②

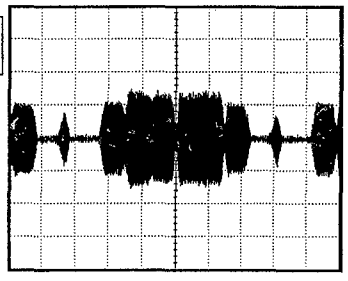

SYSCON/SERVO/TIMER

PB
200ms
1.0V

⑰

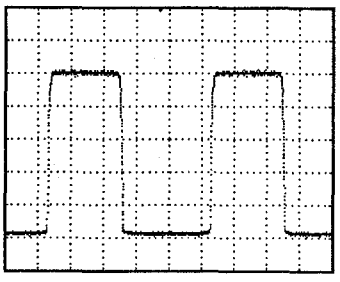

10μs
500mV

㉜

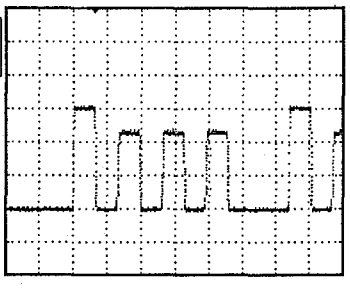

POWER ON
50ns
100mV

③

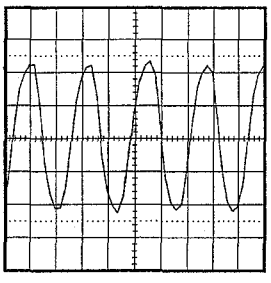

PB
200ms
1.0V

⑱

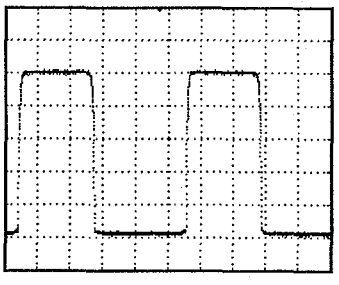

500ns
100mV

㉞

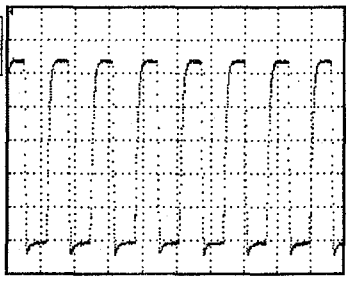

PB
5ms
100mV

④

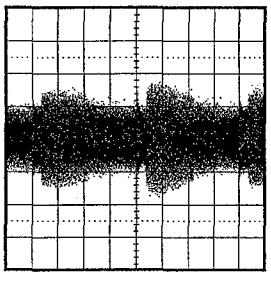

TUNER/JACK

10μs
500mV

㉙

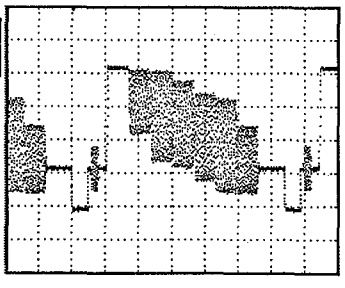

SOUND AMP

1 ns
100mV

㊱

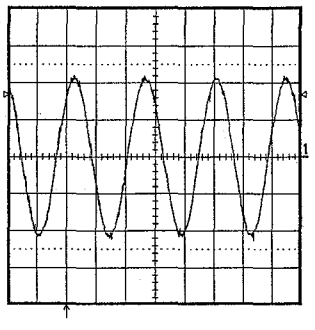

REC, PB
5ms
1V

⑤

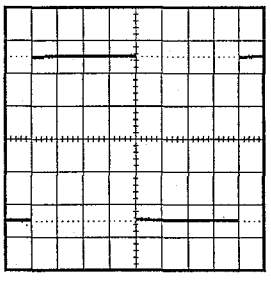

10μs
500mV

㉚

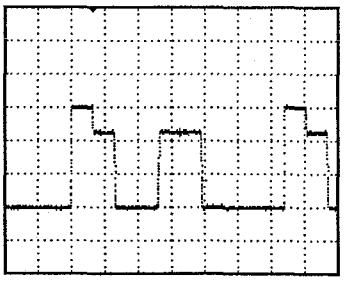

1 ns
100mV

㊲

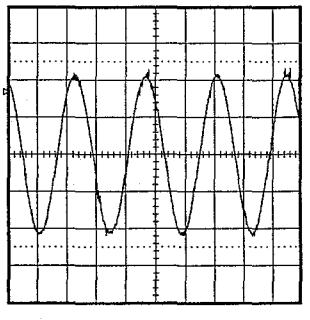

NOTE: The following waveforms were measured at the point of the corresponding balloon number in the schematic diagram.

WAVEFORMS

POWER

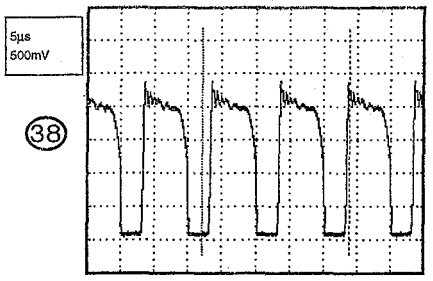

38

39

READ CHANNEL

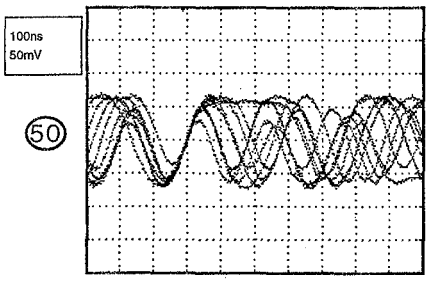

50

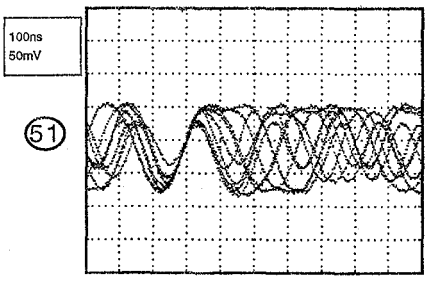

51

DSP

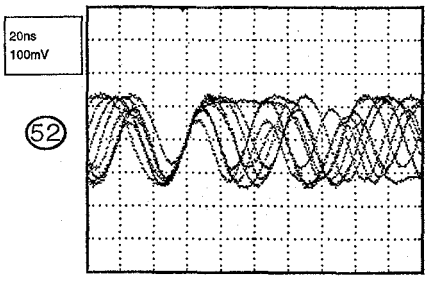

52

MPEG

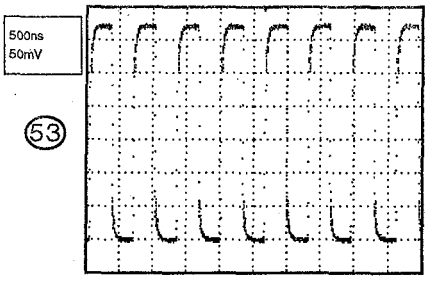

53

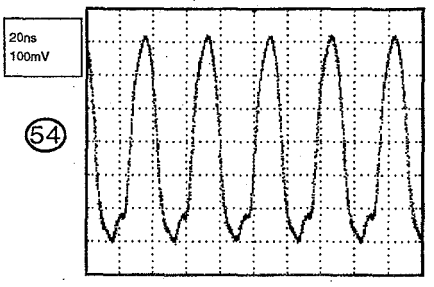

54

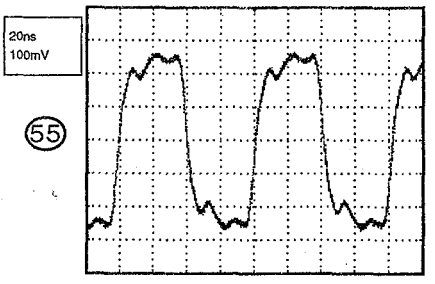

55

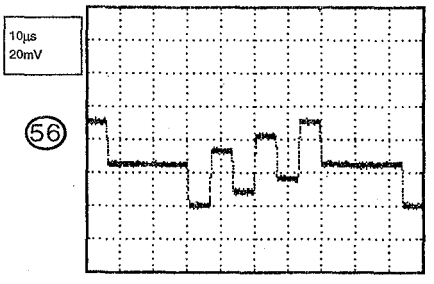

56

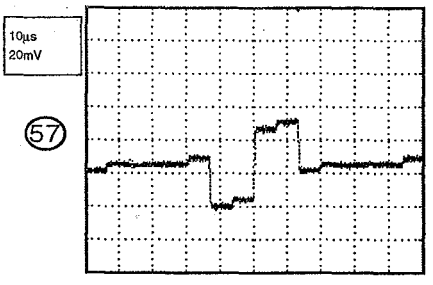

57

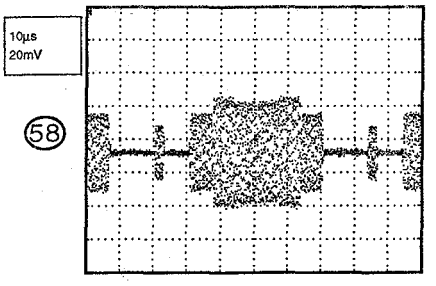

58

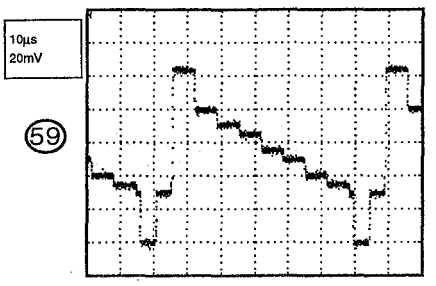

59

MEMORY

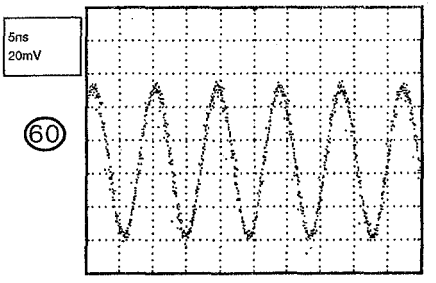

60

AUDIO/VIDEO

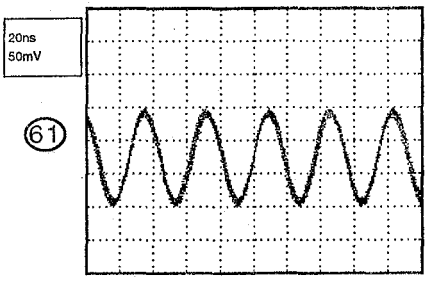

61

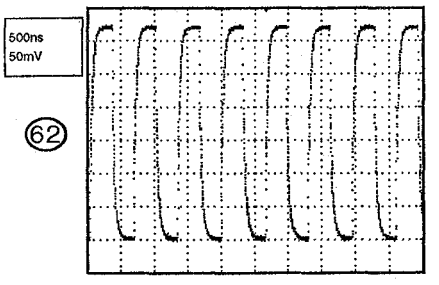

62

NOTE: The following waveforms were measured at the point of the corresponding balloon number in the schematic diagram.

WAVEFORMS

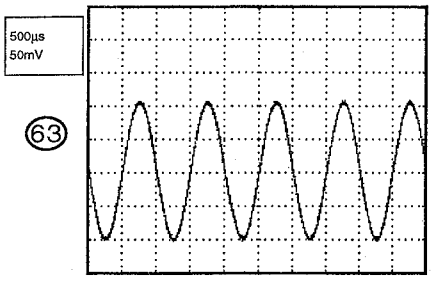

63

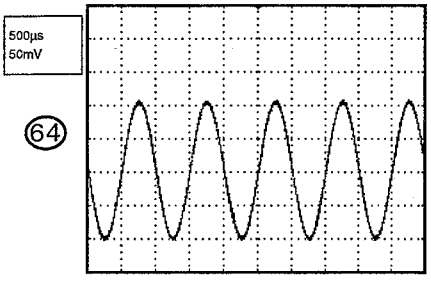

64

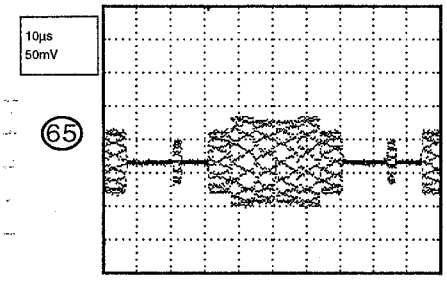

65

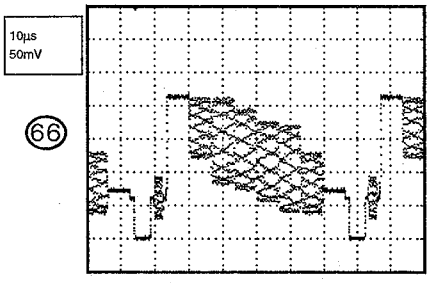

66

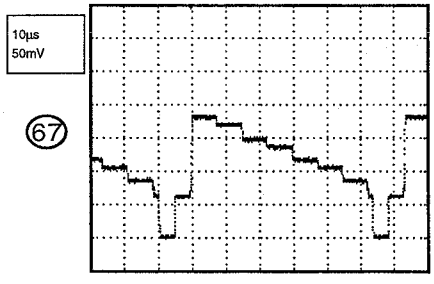

67

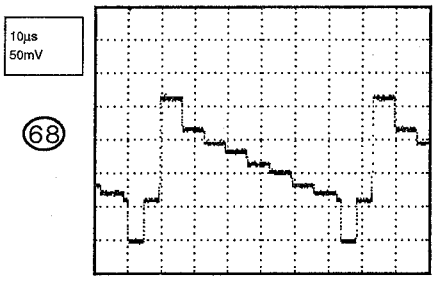

68

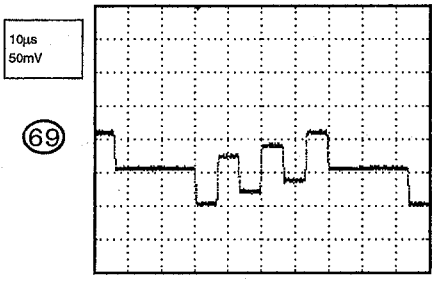

69

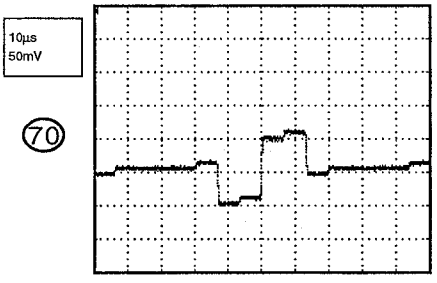

70

SYSCON1

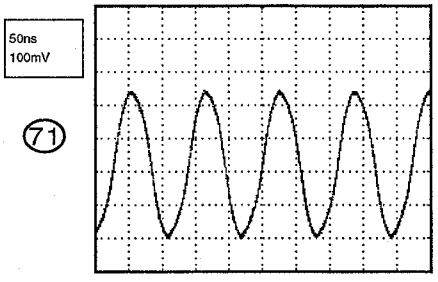

71

NOTE: The following waveforms were measured at the point of the corresponding balloon number in the schematic diagram.

MECHANICAL EXPLODED VIEW

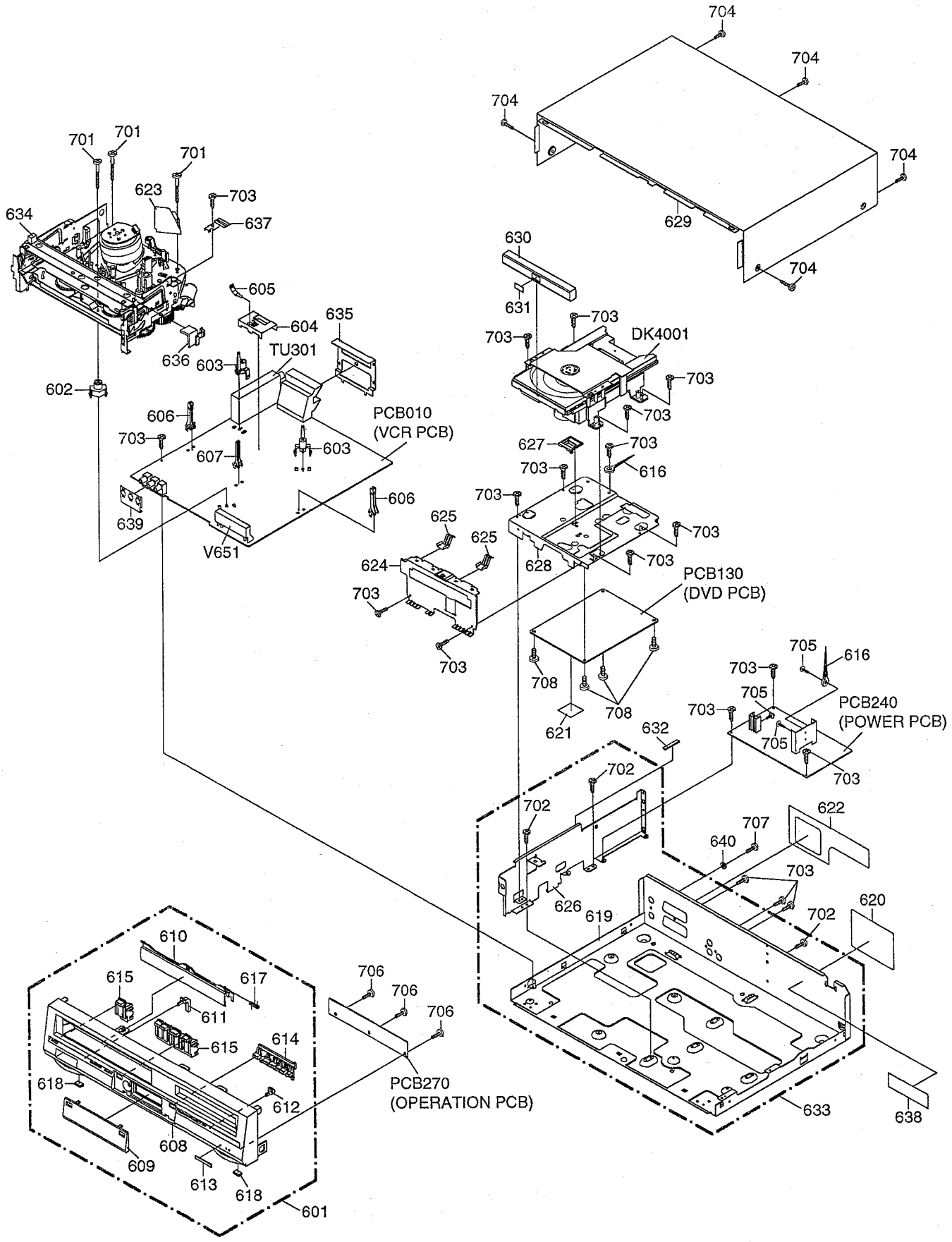

CHASSIS EXPLODED VIEW (TOP VIEW)

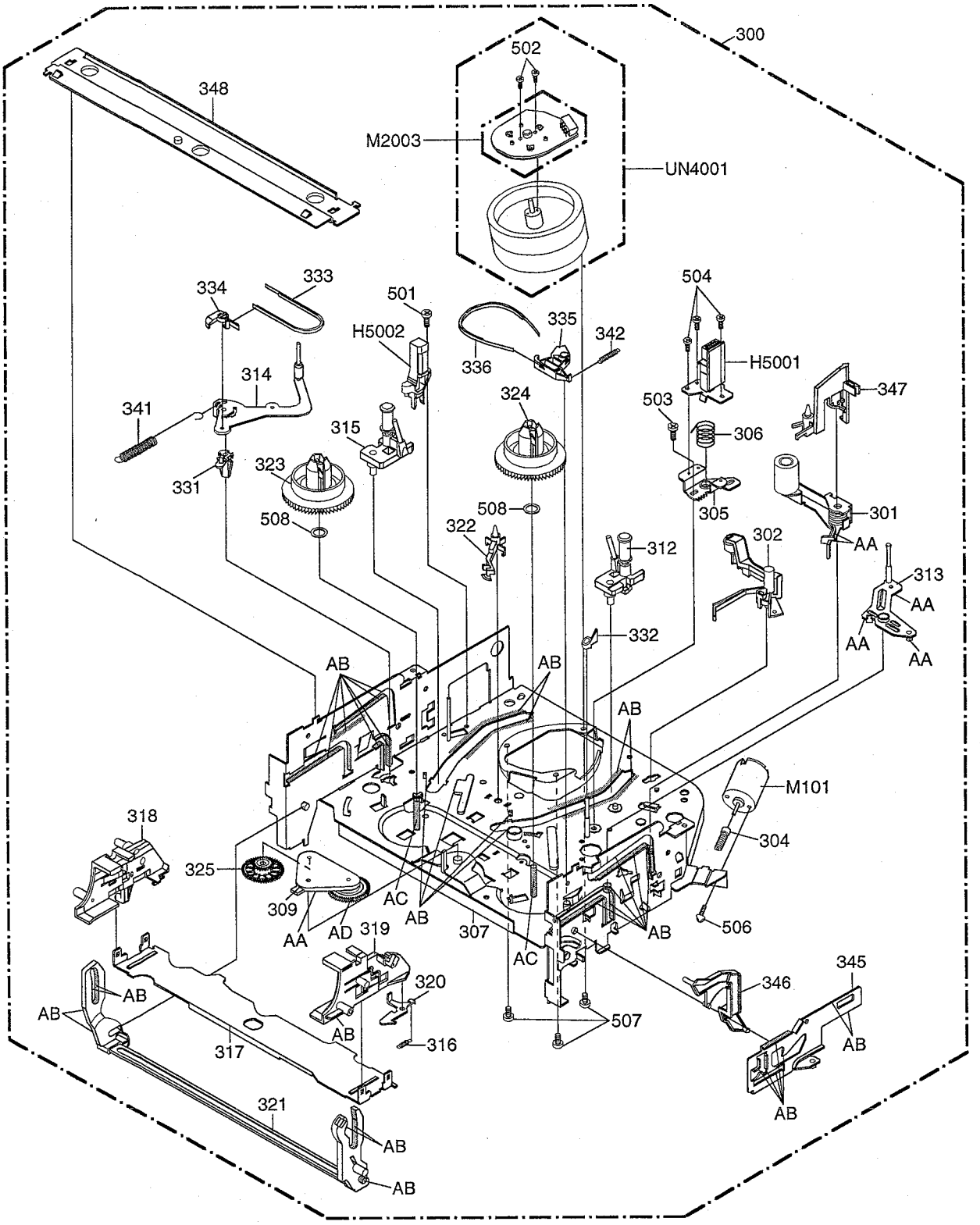

CLASS	PART NO.	MARK
GREASE	G-555G	AA
	MG-33	AB
	FG-84M	AC
	FL-721	AD

NOTE: Applying positions AA, AB, AC and AD for the grease are displayed for this section.
Check if the correct grease is applied for each position.

CHASSIS EXPLODED VIEW (BOTTOM VIEW)

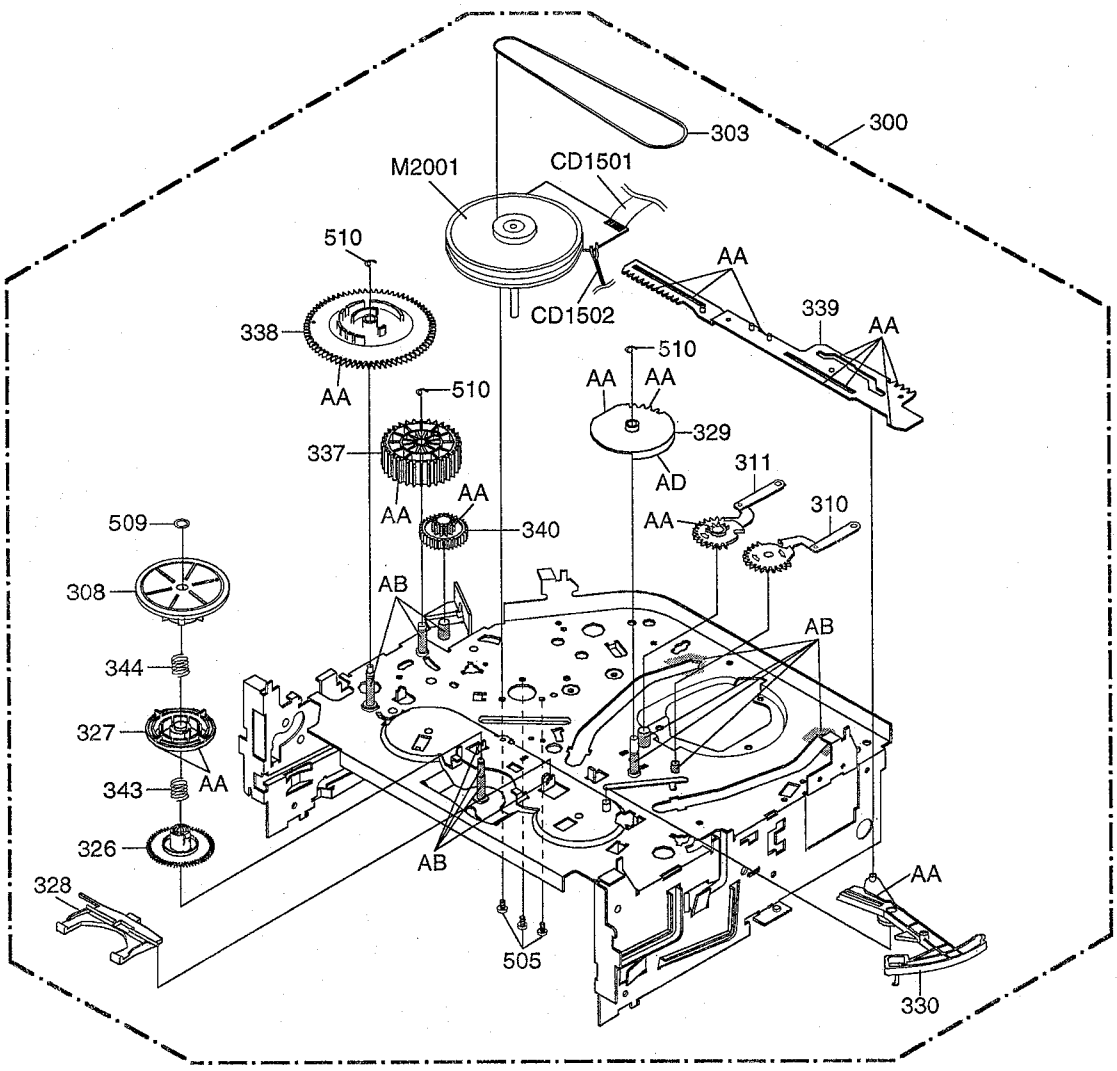

CLASS	PART NO.	MARK
GREASE	G-555G	AA
	MG-33	AB
	FG-84M	AC
	FL-721	AD

NOTE: Applying positions AA, AB, AC and AD for the grease are displayed for this section.
Check if the correct grease is applied for each position.

MECHANICAL REPLACEMENT PARTS LIST

REF. NO.	PART NO.	DESCRIPTION	
601	A2A733A720	CABINET,FRONT ASSY	
602	701WPA0686	HOLDER,DECK	
603	701WPA0751	HOLDER,DECK	
604	752WSA0230	SHIELD,CASE HEAD AMP	
605	753WUAA006	SPRING,EARTH HEAD AMP	
606	85OP700036	HOLDER,EOT SENSOR	
607	85OP700037	HOLDER,LED	
608	701WPJ1114	CABINET,FRONT	
609	711WPD0614	PLATE,DISPLAY	
610	712WPJ0764	FLAP	
611	713WPA0193	GLASS,LED-VCR	
612	713WPA0194	GLASS,LED-DVD	
613	711WPC0005	BADGE,BRAND	
614	735WPB0198	BUTTON,FRAME-DVD	
615	735WPB0199	BUTTON,FRAME-VCR	
616	8995034000	CORD CLIP UL CO.	
617	743WKA0039	SPRING,FLAP	
618	800WFA0051	CUSHION,LEG	
619	702WSA0118	PLATE,BOTTOM	
620	7222022614	SHEET,RATING	
621	7230007461	SHEET,IC	
622	7230007465	SHEET,JACK	
623	752WSA0275	COVER,AC HEAD	
624	753WSA0151	SHIELD,FRONT-DVD	
625	753WUA0060	SPRING,EARTH	
626	761WSA0082	ANGLE,CENTER	
627	761WPA0244	HOLDER,FFC	
628	761WSA0089	ANGLE,DECK	
629	702WSB0065	CABINET,TOP	
630	712WPB0105	PLATE,TRAY-FRONT	
631	7235630001	SHEET,DVD	
632	800WFA0055	CUSHION	20x5xT1
633	A2A733A730	CABINET,BOTTOM ASSY	
634	800WFAA013	CUSHION,LEG	
635	761WSA0090	SHIELD,21PIN	
636	701WPA0781	HOLDER,TOP	
637	753WUA0062	SPRING,EARTH-TOP	
638	7260000332	SHEET,CAUTION	
639	752WSA0280	SHIELD,3-PIN	
640	800WB00004	FIBER WASHER	7x3.2xT0.5
701	8109130B94	SCREW,TAP TITE(B) R PAN	3x29
702	8109230704	SCREW,TAP TITE(B) R BIND	3x7
703	8109230804	SCREW,TAP TITE(B) BIND	3x8
704	8109K30601	SCREW,TAP TITE(B) BIND(3D)	3x6
705	8109I30A04	SCREW,TAP TITE(B) WH7	3x10
706	8110226804	SCREW,TAP TITE(P) BIND	2.6x8
707	8107230404	SCREW,TAP TITE(S) BIND	3x4
708	8109I30804	SCREW,TAP TITE(B) WH7	3x8
---	791WHA0100	GIFT SHEET	
---	792WHA0358	PACKAGE,BACK	
---	792WHA0359	PACKAGE,FRONT	
---	793WCD1414	GIFT BOX	
---	795WCA0662	PAD,DVD/VR	155x250
---	A2A733B975	INSTRUCTION BOOK KIT	
---	JB5Z0300	POLYBAG,INSTRUCTION	
---	J2A73301	INSTRUCTION BOOK	
---	J2A73307	QUICK SET UP SHEET	
---	J4C60629	INFORMATION SHEET	

CHASSIS REPLACEMENT PARTS LIST

REF. NO.	PART NO.	DESCRIPTION	
300	A2A733A420A	DECK ASSY	A2A733A420A
301	85OA400234	PINCH ROLLER BLOCK	
302	85OA500026	AHC ASS'Y	
303	85OP200290	BELT,CAPSTAN (S)	
304	85OP600581	WORM	
305	85OP500083	BASE,AC HEAD	
306	85OP800324	SPRING,AC HEAD	
307	85OA000459	MAIN CHASSIS ASS'Y	
308	85OA200089	CLUTCH ASS'Y	
309	85OA200090	ARM IDLER ASS'Y	
310	85OA300065	LOADING ARM S UNIT	
311	85OA300066	LOADING ARM T UNIT	
312	85OA400223	INCLINED BASE T UINT 3S	
313	85OA400232	P5 ARM ASS'Y 2	
314	85OA400235	TENSION ARM ASS'Y 2	
315	85OA400231	INCLINED BASE S UNIT	
316	85OP800358	SPRING,LOCKER	
317	85OP900736	CASS,HOLDER	
318	85OP900748	CASS,SIDE L	
319	85OP900749	CASS,SIDE R	
320	85OP900739	LOCKER,R	
321	85OA900228	LINK UNIT	
322	85OP000496	POST,CASS GUIDE	
323	85OP200316	REEL,S (S)	
324	85OP200317	REEL,T (S)	
325	85OP200308	GEAR,IDLER	
326	85OP200311	GEAR,CLUTCH	
327	85OP200312	GEAR,COUPLING	
328	85OP200313	LEVER,CLUTCH	
329	85OP300194	GEAR,MAIN LOADING	
330	85OP400490	LEVER,TENSION	
331	85OP400492	HOLDER,TENSION	
332	85OP400520	CAP.P4	
333	85OP400539	BAND,TENSION	
334	85OP400533	CONNECT,TENSION	
335	85OP600573	ARM,BRAKE T	
336	85OP600583	BAND,BRAKE T	
337	85OP600577	CAM,PINCH ROLLER	
338	85OP600578	CAM,MAIN	
339	85OP600579	ROD,MAIN	
340	85OP600582	GEAR,JOINT	
341	85OP800322	SPRING,TENSION	
342	85OP800360	SPRING,BRAKE T	
343	85OP800355	SPRING,COUPLING	
344	85OP800356	SPRING,RING	
345	85OP900750	LEVER,LINK 2	
346	85OP900744	LEVER,FLAP	
347	85OP900745	CASS,OPENER	
348	85OP900746	BRACKET,TOP 3V	

REF. NO.	PART NO.	DESCRIPTION	
501	8107226804	SCREW,TAP TITE(S) BIND	2.6x8
502	8107226504	SCREW,TAP TITE(S) BIND	2.6x5
503	8107226404	SCREW,TAP TITE(S) BIND	2.6x4
504	8102120604	SCREW,PAN	M2x6
505	8109126604	SCREW,TAP TITE(B) PAN	2.6x6
506	810A130404	SCREW/WASHER(A)	M3x4
507	810A126504	SCREW/WASHER(A)	M2.6x5
508	82Q264713N	POLYSLIDER WASHER	2.6x4.7xT0.13
509	82P184505N	POLYSLIDER WASHER(CUT)	1.8x4.5xT0.5
510	83ETW30000	E-RING	3.0
CD1501	122H071603	CORD JUMPER	SMCD-7X151
CD1502	122Y021902	CORD JUMPER	2Y021902
H5001	1523D91034	HEAD (AUDIO CONTROL)	HVMXA1072A
H5002	1543D02013	HEAD (FULL ERASE)	HVFHP0032A
⚠ M101	1596S98001	MOTOR (LOADING)	MDB2B66
⚠ M2001	1510S98036	CAPSTAN DD UNIT	F2QVB08
M2003	1589S11017	MICRO MOTOR	I2OAL05
⚠ UN4001	A2A703A500	CYLINDER UNIT ASS'Y	A2A703A500

ELECTRICAL REPLACEMENT PARTS LIST

REF. NO.	PART NO.	DESCRIPTION	
		TRANSISTORS	
Q3006	0002700690	PHOTO COUPLER	RPI-303
Q3007	0002700690	PHOTO COUPLER	RPI-303
Q3008	TNAAC05002	COMPOUND TRANSISTOR	KRC103SRTK
Q3009	TNAAC05002	COMPOUND TRANSISTOR	KRC103SRTK
Q4001	T65A01213Y	TRANSISTOR,SILICON	2SA1213_Y(TE12L,C)
Q4501	T6YJ1037K0	TRANSISTOR,SILICON	2SA1037AKT146R,S
Q8001	T6YJ1037K0	TRANSISTOR,SILICON	2SA1037AKT146R,S
Q8002	T8YJ2412K0	TRANSISTOR,SILICON	2SC2412KT146 R,S
Q8003	TNYJD05001	COMPOUND TRANSISTOR	DTC144EKAT146
Q8004	TPAAB05001	COMPOUND TRANSISTOR	KRA102SRTK
Q8005	TCYT1740S0	TRANSISTOR,SILICON	2SC1740SP TP
Q8006	T8YJ2412K0	TRANSISTOR,SILICON	2SC2412KT146 R,S
Q8012	TNAAC05002	COMPOUND TRANSISTOR	KRC103SRTK
Q8013	TPAAA05001	COMPOUND TRANSISTOR	KRA101SRTK
Q8014	T8YJ2412K0	TRANSISTOR,SILICON	2SC2412KT146 R,S
Q8015	T8YJ2412K0	TRANSISTOR,SILICON	2SC2412KT146 R,S
Q8501	TAAA1504SY	TRANSISTOR,SILICON	KTA1504S_Y_RTK
Q8502	TAAA1504SY	TRANSISTOR,SILICON	KTA1504S_Y_RTK
Q8503	TAAA1504SY	TRANSISTOR,SILICON	KTA1504S_Y_RTK
Q8505	TAAA1504SY	TRANSISTOR,SILICON	KTA1504S_Y_RTK
Q8507	TNYJB05001	COMPOUND TRANSISTOR	DTC114EKAT146
Q8508	TS5M000037	COMPOUND TRANSISTOR	HN1C03F_B(TE85L)
Q8509	TCAA3875SY	TRANSISTOR,SILICON	KTC3875S_Y_RTK
Q8510	TPAAB05001	COMPOUND TRANSISTOR	KRA102SRTK
Q8511	TPAAB05001	COMPOUND TRANSISTOR	KRA102SRTK
Q8512	T85A03326B	TRANSISTOR,SILICON	2SC3326_B(TE85L)
Q8513	T85A03326B	TRANSISTOR,SILICON	2SC3326_B(TE85L)
Q8601	TNYJC05001	COMPOUND TRANSISTOR	DTC124EKAT146
Q8602	TNYJC05001	COMPOUND TRANSISTOR	DTC124EKAT146
		COILS &TRANSFORMERS	
L101	0316160028	COIL,BIAS OSC	1616002
L102	02167F101J	COIL	100 UH
L103	02167F101J	COIL	100 UH
L104	031616004R	COIL,BIAS OSC	1616004
L105	02167F220J	COIL	22 UH
L106	02167F101J	COIL	100 UH
L107	021LA6R22M	COIL	0.22 UH
L108	021LA6R22M	COIL	0.22 UH
L109	021LA6R22M	COIL	0.22 UH
L110	02167F101J	COIL	100 UH
L111	021LA6221K	COIL	220 UH
L112	021LA6120K	COIL	12 UH
L113	02167F220J	COIL	22 UH
L114	021LA6390K	COIL	39 UH
L116	02167F101J	COIL	100 UH
⚠ L501	029T000083	COIL,LINE FILTER	0R3A433F20
L502	02AHB0A0A4	CORE,FERRITE	W5T_20*10*10A
L503	02167E220K	COIL	R9 22 UH
L505	02167F220J	COIL	22 UH
L506	02167E220K	COIL	R9 22 UH
L507	02167E220K	COIL	R9 22 UH
L701	02167F101J	COIL	100 UH
L702	02167F101J	COIL	100 UH
L801	021LA62R7K	COIL	2.7 UH
L802	02167F220J	COIL	22 UH
L4001	0216S3150K	COIL	15 UH
L4501	0216S1390J	COIL	39 UH
L4502	0216S1330J	COIL	33 UH
L4505	02167F101J	COIL	100 UH
L4506	021LA6220K	COIL	22 UH
L8002	02167F101J	COIL	100 UH
L8003	021LA6101K	COIL	100 UH
L8004	02167F101J	COIL	100 UH
L8005	02167F101J	COIL	100 UH
L8008	02167F470J	COIL	47 UH
L8009	021LA6100K	COIL	10 UH
L8010	021LA6100K	COIL	10 UH
L8011	021LA6100K	COIL	10 UH
L8015	021LA6100K	COIL	10 UH
L8016	02167F101J	COIL	100 UH
L8017	021LA61R0M	COIL	1 UH
L8501	0216S3150K	COIL	15 UH
L8507	02AHB9A972	CORE,FERRITE	W5T29X7.5X19
⚠ T501	0481290944	TRANSFORMER,SWITCHING	81290944
		JACKS	
J8001	060J401082	RCA JACK	MSP-251V-05PBSN
J8002	060J411020	RCA JACK	MSP-242V2-01PBSN

REF. NO.	PART NO.	DESCRIPTION	
		JACKS	
J8004	060J421023	RCA JACK	MSP-281V3-A
J8005	063G000072	SOCKET,21PIN	035_0_8183_00
J8006	060J401080	RCA JACK	MSP-281V1-B
J8007	060J401079	RCA JACK	MSP-281V4-B
		SWITCHES	
SW651	0504101T34	SWITCH,TACT	EVQ21505R
SW652	0504101T34	SWITCH,TACT	EVQ21505R
SW653	0504101T34	SWITCH,TACT	EVQ21505R
SW654	0504101T34	SWITCH,TACT	EVQ21505R
SW655	0504101T34	SWITCH,TACT	EVQ21505R
SW681	0504201T32	SWITCH,TACT	SKQNAED010
SW682	0504201T32	SWITCH,TACT	SKQNAED010
SW684	0504201T32	SWITCH,TACT	SKQNAED010
SW686	0504201T32	SWITCH,TACT	SKQNAED010
SW688	0504201T32	SWITCH,TACT	SKQNAED010
SW689	0504201T32	SWITCH,TACT	SKQNAED010
SW3001	0508A11001	SWITCH(LEAF)	MXS01350MVP0
		P.C.BOARD ASSEMBLIES	
PCB010	A2A733B010	PCB ASS'Y	VMB252A
PCB130	A2A733A130	PCB ASS'Y	VMA249B
PCB240	A2A733B240	PCB ASS'Y	VPA152A
PCB270	A2A733B270	PCB ASS'Y	VEA970A
		MISCELLANEOUS	
B501	024HT03563	CORE,BEADS	W4BRH3.5X6X1.0X2
B503	024HT03564	CORE,BEADS	W4BRH3.5X6X1
B8001	024HT03564	CORE,BEADS	W4BRH3.5X6X1
B8005	024HT03564	CORE,BEADS	W4BRH3.5X6X1
B8501	024HC31022	CORE,BEADS	FCM2012H-102T04
B8502	024HC31022	CORE,BEADS	FCM2012H-102T04
B8503	024HC31022	CORE,BEADS	FCM2012H-102T04
BT601	141L003010	BATTERY,MANGAN	R6P(AR)XICI
CD102	122F061501	CORD,JUMPER	2F061501 or
	122F061502	CORD,JUMPER	2F061502
⚠ CD501	1206459801	CORD AC BUSH	6459801
CD601	06CDVA5003	CABLE,21PIN	S-1002B
CD651	122H052402	CORD,JUMPER	2H052402
CP101	0697290620	CONNECTOR PCB SIDE	TOC-C09X-A1
CP102	069J760029	CONNECTOR PCB SIDE	IMSA-9604S-06Z14
CP103	0697120320	CONNECTOR PCB SIDE	TMC-T02X-E1
CP502	067U014019	WIRE HOLDER	B2013H02-14P
CP503	069S260629	CONNECTOR PCB SIDE	A2001WV2-6P
CP653	069J750019	CONNECTOR PCB SIDE	IMSA-9604S-05Z13
CP681	069R750499	CONNECTOR PCB SIDE	52492-0520
CD2601	122H081006	CORD,JUMPER	2H081006
CD2603	122H060806	CORD,JUMPER	2H060806
CD6002	06CDL02002	RF CABLE PAL FTZ	CDL02002
CD8002	122H0I1801	CORD,JUMPER	2H0I1801
CD8501	06CU2D3001	CORD,CONNECTOR	CU2D3001
CD8502	06CU262501	CORD,CONNECTOR	CU262501
CP1701	069R2E0589	CONNECTOR PCB SIDE	52147-1410
CP2601	069EV8T020	CONNECTOR PCB SIDE	04_6232_108_015
CP2602	069EVNT020	CONNECTOR PCB SIDE	04_6232_123_015
CP2603	069J760029	CONNECTOR PCB SIDE	IMSA-9604S-06Z14
CP3001	06972C0010	CONNECTOR PCB SIDE	TMC-J12P-B2
CP8001	069S2D0629	CONNECTOR PCB SIDE	A2001WV2-13P
CP8002	069J7I0019	CONNECTOR PCB SIDE	IMSA-9604S-18Z13
CP8502	069J7I0019	CONNECTOR PCB SIDE	IMSA-9604S-18Z13
⚠ DK4001	169J00010A	DECK CD	TU2020R
EL001	124120301A	EYE LET	XRY20X30BD
⚠ F501	080NT04003	FUSE	50T040HCC
FH501	06710T0006	HOLDER,FUSE	EYF-52BC
FH502	06710T0006	HOLDER,FUSE	EYF-52BC
NR1001	110N4101M3	R,NETWORK	CAY16-101-J-4R
NR1002	110N4101M3	R,NETWORK	CAY16-101-J-4R
NR1003	110N4101M3	R,NETWORK	CAY16-101-J-4R
NR1004	110N4101M3	R,NETWORK	CAY16-101-J-4R
NR1005	110N4101M3	R,NETWORK	CAY16-101-J-4R
NR1006	110N4101M3	R,NETWORK	CAY16-101-J-4R
NR1007	110N4101M3	R,NETWORK	CAY16-101-J-4R
NR1008	110N4101M3	R,NETWORK	CAY16-101-J-4R
NR1009	110N4101M3	R,NETWORK	CAY16-101-J-4R
NR1010	110N4101M3	R,NETWORK	CAY16-101-J-4R
NR1011	110N4101M3	R,NETWORK	CAY16-101-J-4R
OS651	077Q037001	REMOTE RECEIVER	PIC-37043LO
TM601	076D0FI010	TRANSMITTER	ORV201N38010
⚠ TU301	0162K01026	RF UNIT	TCMB0601PD13D
V651	0040F94003	LED DISPLAY	ELF-4M6SDRVGWB

ELECTRICAL REPLACEMENT PARTS LIST

REF. NO.	PART NO.	DESCRIPTION	
		RESISTORS	
⚠ R502	R3X181R82J	R,METAL OXIDE	0.82 OHM 1W
⚠ R504	R3X181561J	R,METAL OXIDE	560 OHM 1W
⚠ R512	R3X18A823J	R,METAL OXIDE	82K OHM 2W
⚠ R516	R63581R22J	R,FUSE	0.22 OHM 1W
⚠ R517	R002T2391J	RC	390 OHM 1/2W
⚠ R1702	R3X18A010J	R,METAL OXIDE	1 OHM 2W
R4009	R002T43R9J	RC	3.9 OHM 1/4W
		CAPACITORS	
C501	E02L03222M	CE	2200 UF 25V
⚠ C502	P2472B104M	CMP	0.1 UF 275V PHE840
C511	E62QFH101M	CE	100 UF 400V
C515	C0JFE0514M	CC	0.01 UF 500V E
⚠ C516	CB3930MQ3M	CC	0.0047UF 250V or
	CD39E0MQ3M	CC	0.0047UF 250V
C518	E02LF1332M	CE	3300 UF 10V
C525	C0PLRR7H2K	CC	220 PF 2KV RR
		DIODES	
D101	D1VT001330	DIODE,SILICON	1SS133T-77
⚠ D502	D2WTRM11C0	DIODE,SILICON	RM11C-EIC
⚠ D503	D2WTRM11C0	DIODE,SILICON	RM11C-EIC
⚠ D505	D2WTRM11C0	DIODE,SILICON	RM11C-EIC
⚠ D506	D2WTRM11C0	DIODE,SILICON	RM11C-EIC
⚠ D507	D2WXB290S0	DIODE,SILICON	SB290S
⚠ D508	D23T0UG2D0	DIODE,SILICON	UG2D-G23
D509	D2WXGP10K0	DIODE,RECTIFIER	RGP10K-EIC
⚠ D510	D97U02201B	DIODE,ZENER	MTZJ22B T-77
⚠ D512	D2LKB340L0	DIODE,SCHOTTKY	SB340L-6737
⚠ D515	D2LKB340L0	DIODE,SCHOTTKY	SB340L-6737
⚠ D518	D28TELS6N6	DIODE,RECTIFIER	10ELS6N-TA1B2
⚠ D522	D28TELS6N6	DIODE,RECTIFIER	10ELS6N-TA1B2
⚠ D523	D97U03301B	DIODE,ZENER	MTZJ33B T-77
D524	D1VT001330	DIODE,SILICON	1SS133T-77
D525	D2WXN40050	DIODE,SILICON	1N4005-EIC
⚠ D529	D2WXB290S0	DIODE,SILICON	SB290S
D530	D28TELS6N6	DIODE,RECTIFIER	10ELS6N-TA1B2
D531	D97U01801B	DIODE,ZENER	MTZJ18B T-77
D652	0021E5Q210	LED	LTL-1CHGE-002A
D656	D2WXN40050	DIODE,SILICON	1N4005-EIC
D681	0021E5Q210	LED	LTL-1CHGE-002A
D801	DD1RMA3670	DIODE,SILICON	MA367-(TX)
D1701	D1VT001330	DIODE,SILICON	1SS133T-77
D1702	D97U01201B	DIODE,ZENER	MTZJ12B T-77
D1703	D1VT001330	DIODE,SILICON	1SS133T-77
⚠ D1704	D97U02401B	DIODE,ZENER	MTZJ24B T-77
D1706	D1VT001330	DIODE,SILICON	1SS133T-77
⚠ D1708	D97U01301B	DIODE,ZENER	MTZJ13B T-77
D1709	D1VT001330	DIODE,SILICON	1SS133T-77
⚠ D1710	D97U01001B	DIODE,ZENER	MTZJ10B T-77
D1711	D2WXN40050	DIODE,SILICON	1N4005-EIC
D1712	D1VT001330	DIODE,SILICON	1SS133T-77
D2601	DD5R003680	DIODE,SILICON	1SS368(TPH3)
D2602	DD5R003680	DIODE,SILICON	1SS368(TPH3)
D3001	0010100320	INFRARED LED	LNA2702L010R
D3002	D1VT001330	DIODE,SILICON	1SS133T-77
D4001	D2WXN40050	DIODE,SILICON	1N4005-EIC
D8006	D1VT001330	DIODE,SILICON	1SS133T-77
D8007	D1VT001330	DIODE,SILICON	1SS133T-77
D8009	D1VT001330	DIODE,SILICON	1SS133T-77
D8010	D1VT001330	DIODE,SILICON	1SS133T-77
D8013	D97U04R71B	DIODE,ZENER	MTZJ4.7B T-77
D8501	DD5R002260	DIODE,SILICON	1SS226(TE85L)
D8502	DD5R002260	DIODE,SILICON	1SS226(TE85L)
D8503	DD5R002260	DIODE,SILICON	1SS226(TE85L)
D8504	DD5R002260	DIODE,SILICON	1SS226(TE85L)
D8505	DD5R002260	DIODE,SILICON	1SS226(TE85L)
		ICS	
IC101	I04F38217F	IC	HA118217F
⚠ IC501	I1KJ9A4310	IC	KIA431
⚠ IC502	I1KA97809A	IC	KIA7809API
⚠ IC503	0002E00610	PHOTO COUPLER	LTV-817M-VB
IC701	I0KF79605H	IC	TDA9605H
IC801	I0KFA9874H	IC	TDA9874H
IC1001	I55K0251AF	IC	OEC6069A
IC1002	I5HJ001BF0	IC	S-24C01BFJ-TB
IC1005	I55F07S08F	IC	TC7S08F-TE85L
IC1006	I55F0W2410	IC	TC7W241FU-TE12L
IC2001	I05F094A03	IC	OEC6068A

REF. NO.	PART NO.	DESCRIPTION	
		ICS	
IC2002	I59J0258B3	IC	MSM5416258B-30
IC2601	I55F07S04F	IC	TC7S04F(TE85L)
IC2602	I07FV58130	IC	BA5813FM
IC2603	I05FR1323F	IC	OEC6067A
IC3001	I56F57079A	IC	OEC7079A
IC3004	I9UF032310	IC	PST3231NR
IC3005	I56F07080A	IC	OEC7080A
IC3099	A2A733B015	IC	S-24C08ADPA-01
IC4001	ICQF067320	IC	ZR36732
IC4002	I5HF96A250	IC	S-816A25AMC-BAA-T2
IC4003	I59J0160FB	IC	MSM56V16160F-8
IC4004	I59J0160FB	IC	MSM56V16160F-8
IC4005	I59J0258B3	IC	MSM5416258B-30
IC4006	I5QJ0F8315	IC	BA-55PFTN-SFK-31
IC4501	I53J783JM0	IC	LC74783JM-9838
IC8001	I03F030260	IC	LA73026V
IC8002	I0QF02533V	IC	NJM2533V(TE2)
IC8003	I07F033080	IC	BA3308F
IC8004	I0QF045800	IC	NJM4580M
IC8501	I55F0H08F0	IC	TC7SH08FU(TE85L)
IC8503	I1BF019590	IC	AD1959YRSRL
IC8504	I0UFG540A0	IC	MM1540AFBE
		TRANSISTORS	
Q101	TCAT032034	TRANSISTOR,SILICON	KTC3203_Y-AT
Q102	TCAT032034	TRANSISTOR,SILICON	KTC3203_Y-AT
Q103	TNYJA05001	COMPOUND TRANSISTOR	DTC143EKAT146
Q104	TCAT032034	TRANSISTOR,SILICON	KTC3203_Y-AT
Q105	TPAAC05002	COMPOUND TRANSISTOR	KRA103SRTK
Q106	TCATC31980	TRANSISTOR,SILICON	KTC3198-AT(Y,GR)
Q107	TCATC31980	TRANSISTOR,SILICON	KTC3198-AT(Y,GR)
⚠ Q501	T410K26470	FET	2SK2647-01MR
⚠ Q502	TCAT032034	TRANSISTOR,SILICON	KTC3203_Y-AT
⚠ Q504	TAAT01241Y	TRANSISTOR,SILICON	KTA1241_Y-AT
⚠ Q505	TCAT03209Y	TRANSISTOR,SILICON	KTC3209_Y-AT
Q506	TNATA03002	COMPOUND TRANSISTOR	KRC101MAT
Q651	TPAAC05002	COMPOUND TRANSISTOR	KRA103SRTK
Q653	TNAAC05002	COMPOUND TRANSISTOR	KRC103SRTK
Q654	T6YJ1037K0	TRANSISTOR,SILICON	2SA1037AKT146R,S
Q655	TNAAC05002	COMPOUND TRANSISTOR	KRC103SRTK
Q656	TNAAC05002	COMPOUND TRANSISTOR	KRC103SRTK
Q657	T6YJ1037K0	TRANSISTOR,SILICON	2SA1037AKT146R,S
Q658	TNAAC05002	COMPOUND TRANSISTOR	KRC103SRTK
Q659	TNAAC05002	COMPOUND TRANSISTOR	KRC103SRTK
Q660	T6YJ1037K0	TRANSISTOR,SILICON	2SA1037AKT146R,S
Q661	TNAAC05002	COMPOUND TRANSISTOR	KRC103SRTK
Q662	T6YJ1037K0	TRANSISTOR,SILICON	2SA1037AKT146R,S
Q663	TNAAC05002	COMPOUND TRANSISTOR	KRC103SRTK
Q664	TNAAC05002	COMPOUND TRANSISTOR	KRC103SRTK
Q665	T6YJ1037K0	TRANSISTOR,SILICON	2SA1037AKT146R,S
Q666	TNAAC05002	COMPOUND TRANSISTOR	KRC103SRTK
Q667	TNAAC05002	COMPOUND TRANSISTOR	KRC103SRTK
Q1003	TPYJB05001	COMPOUND TRANSISTOR	DTA114EKAT146
Q1004	TPYJB05001	COMPOUND TRANSISTOR	DTA114EKAT146
⚠ Q1701	TCAT032034	TRANSISTOR,SILICON	KTC3203_Y-AT
⚠ Q1702	TCAT03209Y	TRANSISTOR,SILICON	KTC3209_Y-AT
⚠ Q1703	TCAT03209Y	TRANSISTOR,SILICON	KTC3209_Y-AT
⚠ Q1704	TCAT03209Y	TRANSISTOR,SILICON	KTC3209_Y-AT
Q1705	T8YJ2412K0	TRANSISTOR,SILICON	2SC2412KT146 R,S
⚠ Q1706	TAAT01241Y	TRANSISTOR,SILICON	KTA1241_Y-AT
Q1707	T8YJ2412K0	TRANSISTOR,SILICON	2SC2412KT146 R,S
⚠ Q1708	TCAT03209Y	TRANSISTOR,SILICON	KTC3209_Y-AT
Q1709	TNAAC05002	COMPOUND TRANSISTOR	KRC103SRTK
Q1711	TNAAC05002	COMPOUND TRANSISTOR	KRC103SRTK
⚠ Q1712	TCAT03209Y	TRANSISTOR,SILICON	KTC3209_Y-AT
⚠ Q1713	TAAT012714	TRANSISTOR,SILICON	KTA1271_Y-AT
Q1714	TNAAC05002	COMPOUND TRANSISTOR	KRC103SRTK
Q2001	T85A03326B	TRANSISTOR,SILICON	2SC3326_B(TE85L)
Q2601	TNAAB05003	COMPOUND TRANSISTOR	KRC102SRTK
Q2602	TS5M000037	COMPOUND TRANSISTOR	HN1C03F_B(TE85L)
Q2603	TS5M000036	COMPOUND TRANSISTOR	HN1B01F_Y(TE85L)
Q2604	TS5M000036	COMPOUND TRANSISTOR	HN1B01F_Y(TE85L)
Q2605	T65A01213Y	TRANSISTOR,SILICON	2SA1213_Y(TE12L,C)
Q3001	0000100380	PHOTO TRANSISTOR	PNA2604M010R
Q3002	0000100380	PHOTO TRANSISTOR	PNA2604M010R
Q3003	TNAAC05002	COMPOUND TRANSISTOR	KRC103SRTK
Q3004	0002700680	PHOTO COUPLER	RPI-352C40N
Q3005	0002700680	PHOTO COUPLER	RPI-352C40N

ELECTRICAL REPLACEMENT PARTS LIST

REF. NO.	PART NO.	DESCRIPTION	
		MISCELLANEOUS	
X101	100CT4R407	CRYSTAL	HC-49/U
X801	100CT02401	CRYSTAL	HC-49/U
X1001	1002T00901	CERAMIC OSCILLATOR	CSTCC9M00G53-R0
X3001	100DA32R01	CRYSTAL	DT-26
X3002	100CT01207	CRYSTAL	HC-49/U-S
X3003	1001T4R010	CERAMIC OSCILLATOR	EFOMC4004T4
X8501	100WT02706	CRYSTAL	HC-49/U-S

RESISTOR

RC..... CARBON RESISTOR

CAPACITORS

CC..... CERAMIC CAPACITOR
CE..... ALUMI ELECTROLYTIC CAPACITOR
CP..... POLYESTER CAPACITOR
CPP..... POLYPROPYLENE CAPACITOR
CPL..... PLASTIC CAPACITOR
CMP..... METAL POLYESTER CAPACITOR
CMPL..... METAL PLASTIC CAPACITOR
CMPP..... METAL POLYPROPYLENE CAPACITOR

SPEC.NO.	M2A7-33A
O/R NO.	W232504

ORION

CLASS 1
LASER PRODUCT

DVD/VR-2953 SI

SERVICE MANUAL

DVD VIDEO PLAYER & VHS VIDEO CASSETTE RECORDER

DVD VIDEO™ COMPACT disc DIGITAL AUDIO

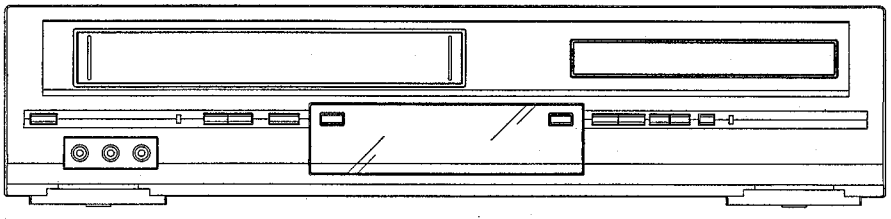

DOLBY DIGITAL dts DIGITAL OUT

SUPPLEMENT
CHASSIS CODE B

This SUPPLEMENT must be used together SERVICE MANUAL for DVD/VR-2951 SI.
All other test and repair procedures are as shown in the ORIGINAL MANUAL.
Please file this SUPPLEMENT with the ORIGINAL VERSIONS.

Design and specifications are subject to change without notice.

ELECTRICAL REPLACEMENT PARTS LIST

REF. NO.	DVD/VR-2951 SI		DVD/VR-2953 SI	
	PART NO.	DESCRIPTION	PART NO.	DESCRIPTION
R812	R801R7103J	RC 10K OHM 1/10W		DEL
R815	R801R7393J	RC 39K OHM 1/10W		DEL
R816	R801R7393J	RC 39K OHM 1/10W		DEL
C805	CS0RB0414K	CC 0.01 UF 50V B		DEL
C820	CS0RF0415Z	CC 0.1 UF 50V F		DEL
C828	CS0RCH4H1J	CC 22 PF 50V CH		DEL
C832	CS0RCH4H1J	CC 22 PF 50V CH		DEL
C833	CS0RB04L4K	CC 0.033 UF 50V B		DEL
C836	CS0RB02L5K	CC 0.33 UF 16V B		DEL
D801	DD1RMA3670	DIODE,SILICON MA367-(TX)		DEL
IC801	I0KFA9874H	IC TDA9874H	I0KFA9874A	IC TDA9874AH
L801	021LA62R7K	COIL 2.7 UH		DEL
DK4001	169J00010A	DECK CD TU2020R	169J00018A	DECK CD TU2320R
TM601	076D0FI01A	TRANSMITTER ORV201N38011	076D0FI040	TRANSMITTER ORV201N38050
PCB010	A2A733B010	VCR MT PCB ASS'Y VMB252A	A2A799E010B	VCR MT PCB ASS'Y VMB252A

MECHANICAL REPLACEMENT PARTS LIST

REF. NO.	DVD/VR-2951 SI		DVD/VR-2953 SI	
	PART NO.	DESCRIPTION	PART NO.	DESCRIPTION
601	A2A733A720	CABINET,FRONT ASS'Y	A2A799E720B	CABINET,FRONT ASS'Y
608	701WPJB905	CABINET,FRONT	701WPJB881	CABINET,FRONT
609	711WPDA515	PLATE,DISPLAY	711WPDA517	PLATE,DISPLAY
610	712WPJB576	FLAP	712WPJB583	FLAP
614	738WPBA032	BUTTON,FRAME-DVD	738WPBA035	BUTTON,FRAME-DVD
615	738WPBA033	BUTTON,FRAME-VCR	738WPBA034	BUTTON,FRAME-VCR
620	7222022614	SHEET,RATING	722202A635	SHEET,RATING
---	791WHA0100	GIFT,SHEET	791UHA0014	GIFT,SHEET
---	792WHA0358	PACKAGE,BACK	792UHA0164	PACKAGE,BACK
---	792WHA0359	PACKAGE,FRONT	792UHA0163	PACKAGE,FRONT
---	793WCD1414	GIFT BOX	793UCDB044	GIFT BOX
---	795WCA0662	PAD,DVD/VR 155x250	795UCA0021	PAD,DVD/VR 155x250MM
---	A2A733B975	INSTRUCTION BOOK KIT	A2A798B975	INSTRUCTION BOOK KIT
---	JB5Z0300	POLYBAG,INSTRUCTION	JB5X0300	POLYBAG,INSTRUCTION
---	J2A73301	INSTRUCTION BOOK	J2A79801A	INSTRUCTION BOOK
---	J2A73307	QUICK SET UP SHEET	J2A79807A	QUICK SET-UP SHEET
---	J4C60629	INFORMATION SHEET	J4E00129	INFORMATION SHEET

WHEN REPLACING EEPROM (MEMORY) IC

ADDRESS	DVD/VR-2951 SI	DVD/VR-2953 SI
	DATA	DATA
CE	40	00
D2	06	05
F5	83	80

PRINTED CIRCUIT BOARDS
VCR (INSERTED PARTS)
SOLDER SIDE
(DVD/VR-2953 SI)

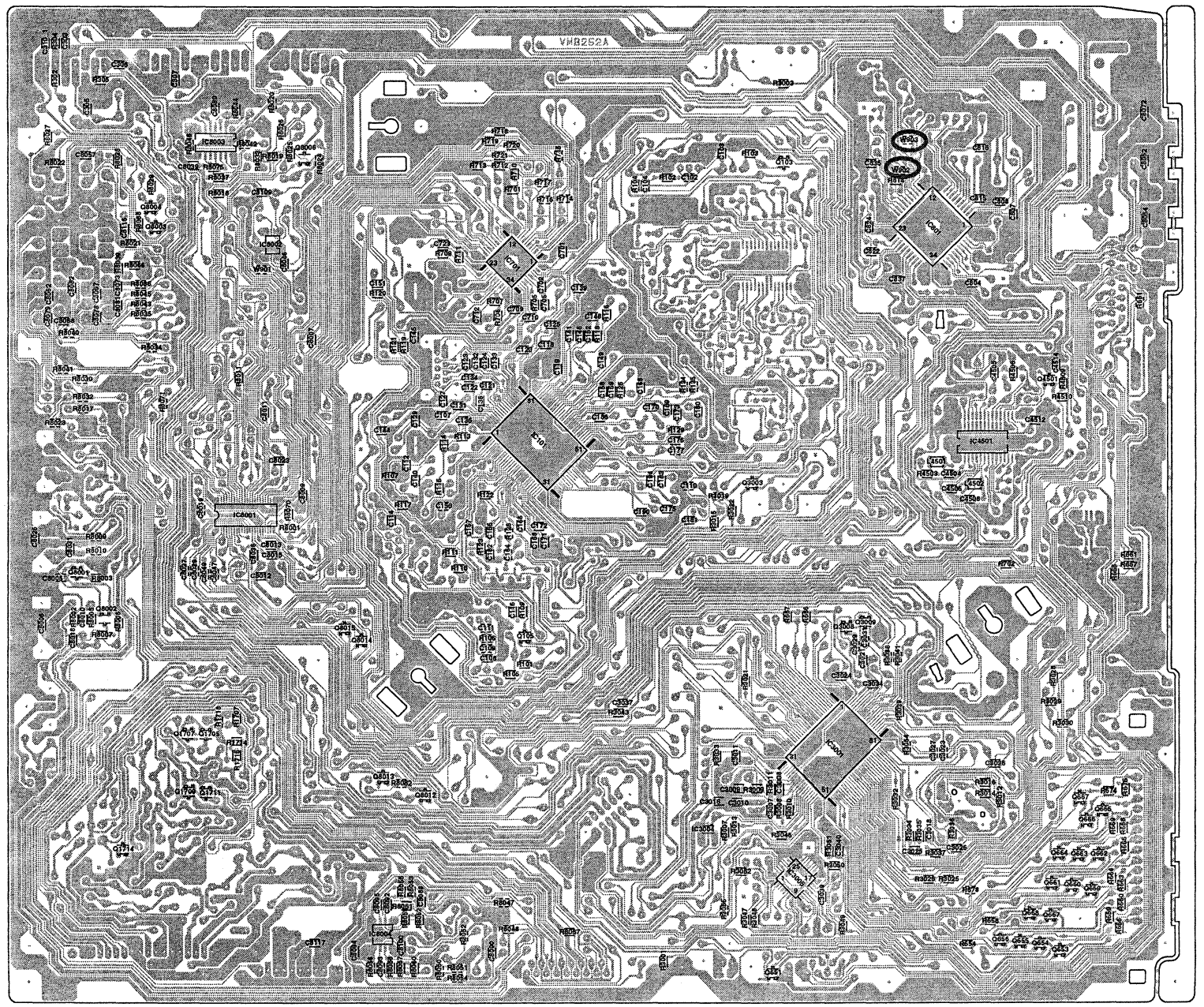

ORION

CLASS 1
LASER PRODUCT

DVD/VR-2951B SI

SERVICE MANUAL

DVD VIDEO PLAYER & VHS VIDEO CASSETTE RECORDER

DVD VIDEO™ COMPACT disc DIGITAL AUDIO

This SUPPLEMENT must be used together with the SERVICE MANUAL for DVD/VR-2951 SI.
All other test and repair procedures are as shown in the ORIGINAL MANUAL.
Please file this SUPPLEMANT with the ORIGINAL VERSION.

DOLBY DIGITAL dts DIGITAL OUT

SUPPLEMENT
CHASSIS CODE A

WHEN REPLACING EEPROM (MEMORY) IC

ADDRESS	DVD/VR-2951 SI	DVD/VR-2951B SI
	DATA	DATA
D2	06	0A
F0	02	04

MECHANICAL REPLACEMENT PARTS LIST

REF. NO.	DVD/VR-2951 SI		DVD/VR-2951B SI	
	PART NO.	DESCRIPTION	PART NO.	DESCRIPTION
620	7222022614	SHEET,RATING	7222022617	SHEET,RATING
---	793WCD1414	GIFT BOX	793UCD1176	GIFT BOX
---	A2A733B975	INSTRUCTION BOOK KIT	A2A720B975	INSTRUCTION BOOK KIT
---	J2A73301	INSTRUCTION BOOK	J2A72001	INSTRUCTION BOOK (F)
---	J2A73307	QUICK SET UP SHEET	J2A72007	QUICK SET UP SHEET
---		———	J2A72010	INSTRUCTION BOOK (D)
---	J4C60629	INFORMATION SHEET		DELETE

ELECTRICAL REPLACEMENT PARTS LIST

REF. NO.	DVD/VR-2951 SI		DVD/VR-2951B SI	
	PART NO.	DESCRIPTION	PART NO.	DESCRIPTION
CD6002	06CDL02002	RF CABLE PAL FTZ CDL02002	06CDL02003	CABLE,PAL CDL02003

SPEC.NO.	M2A7-20B
O/R NO.	U242505

SPEC.NO.	M2A7-99E
O/R NO.	U282514

HI-FI/DEMODULATOR SCHEMATIC DIAGRAM

(VCR MT PCB)

(DVD/VR-2953SI)

ADD

W902

W903

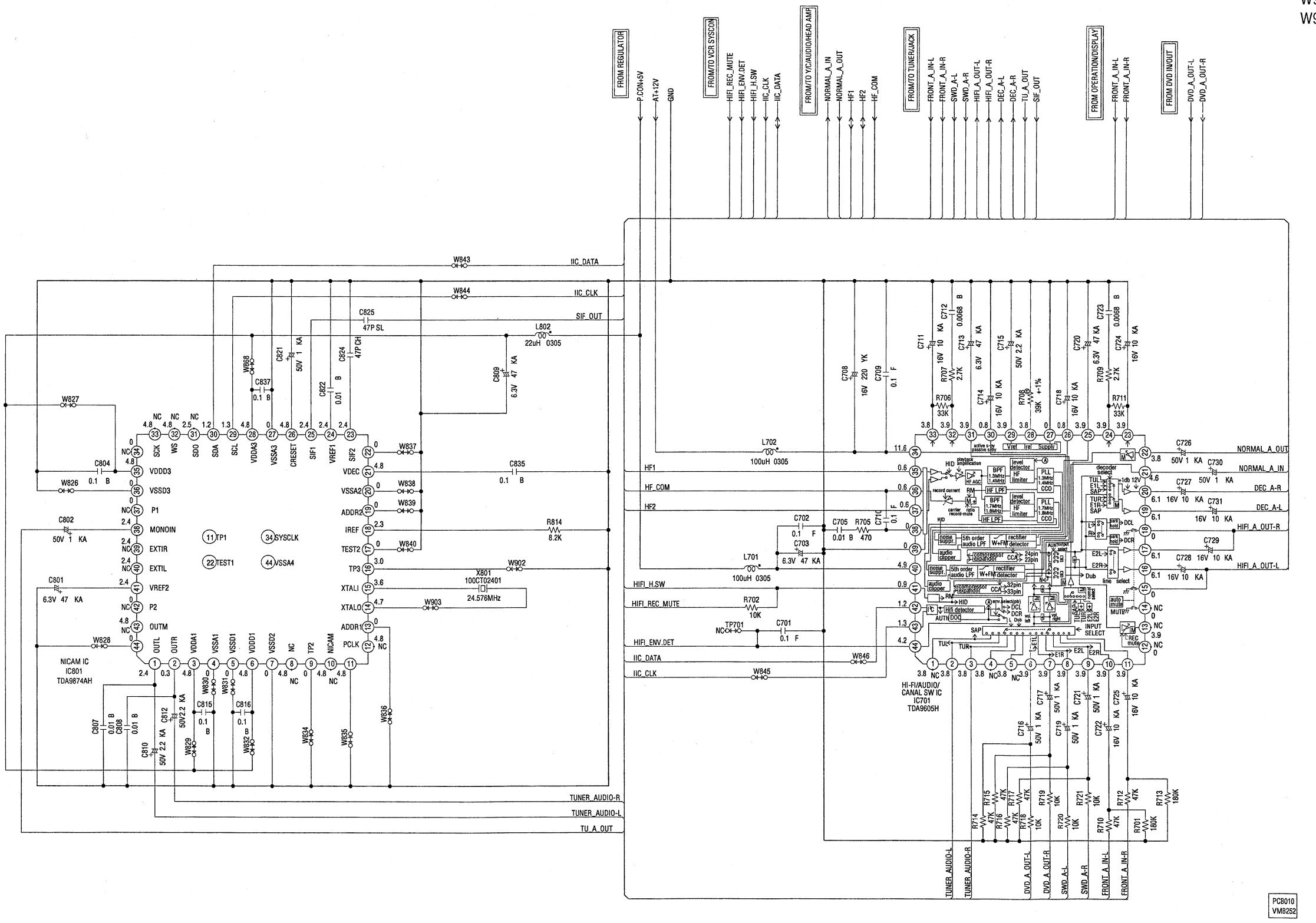

NOTE:THE DC VOLTAGE EACH PART WAS MEASURED WITH THE DIGITAL TESTER DURING PLAYBACK.

NOTE:THIS SCHEMATIC DIAGRAM IS THE LATEST AT THE TIME OF PRINTING AND SUBJECT TO CHANGE WITHOUT NOTICE。